DOCUMENT RESUME

ED 086 444 SE 013 878

TITLE Magnetic Particle Testing, RQA/M1-5330.16.
INSTITUTION General Dynamics, San Diego, Calif. Convair Div.; National Aeronautics and Space Administration, Huntsville, Ala. George C. Marshall Space Flight Center.
REPORT NO NAS8-20185
PUB DATE 1 Jan 67
NOTE 142p.

EDRS PRICE MF-$0.65 HC-$6.58
DESCRIPTORS Aerospace Technology; *Finishing; *Instructional Materials; *Magnets; Post Secondary Education; Quality Control; Science Education; Technical Education; *Technology

ABSTRACT

As one in the series of classroom training handbooks, prepared by the U.S. space program, instructional material is presented in this volume concerning familiarization and orientation on magnetic particle testing. The subject is divided under the following headings: Introduction, Principles of Magnetic Particle Testing, Magnetic Particle Test Equipment, Mediums and Their Preparation, Magnetic Particle Applications, Classification of Discontinuities, and Comparison and Selection of Nondestructive Testing Processes. High product reliability and quality in metal processing are the main concerns through the volume. The material is designed for use in the classroom and practical exercise portions, and successful completion of the corresponding programmed instruction handbook is the prerequisite for receiving classroom training. Included are illustrations for explanation purposes and tables of magnetic characteristics. (CC)

ED 086444

NASA SE

January 1, 1967

QUALITY AND RELIABILITY ASSURANCE LABORATORY

U.S. DEPARTMENT OF HEALTH, EDUCATION & WELFARE
NATIONAL INSTITUTE OF EDUCATION
THIS DOCUMENT HAS BEEN REPRODUCED EXACTLY AS RECEIVED FROM THE PERSON OR ORGANIZATION ORIGINATING IT. POINTS OF VIEW OR OPINIONS STATED DO NOT NECESSARILY REPRESENT OFFICIAL NATIONAL INSTITUTE OF EDUCATION POSITION OR POLICY.

MAGNETIC PARTICLE TESTING

RQA/M1-5330.16

SE 013 878

GEORGE C. MARSHALL SPACE FLIGHT CENTER
HUNTSVILLE, ALABAMA

NATIONAL AERONAUTICS AND SPACE ADMINISTRATION

MSFC - Form 1292 (September 1961)

PREFACE

Classroom Training Handbook - Magnetic Particle Testing (5330.16) is one of a series of training handbooks designed for use in the classroom and practical exercise portions of Nondestructive Testing. It is intended that this handbook be used in the instruction of those persons who have successfully completed Programmed Instruction Handbook - Magnetic Particle Testing (5330.11).

Although formal classroom training is not scheduled at the present time, this handbook contains material that is beneficial to personnel engaged in Nondestructive Testing.

NASA's programs involve tightly scheduled procurement of only small quantities of space vehicles and ground support equipment, requiring the extreme in reliability for the first as well as later models. The failure of one article could result in mission failure. This requirement for complete reliability necessitates a thoroughly disciplined approach to Nondestructive Testing.

A major share of the responsibility for assuring such high levels of reliability lies with NASA, other Government agencies, and contractor Nondestructive Testing personnel. These are the people who conduct or monitor the tests that ultimately confirm or reject each piece of hardware before it is committed to its mission. There is no room for error — no chance for reexamination. The decision must be right — unquestionably — the first time.

General technical questions concerning this publication should be referred to the George C. Marshall Space Flight Center, Quality and Reliability Assurance Laboratory, Huntsville, Alabama 35812.

The recipient of this handbook is encouraged to submit recommendations for updating and comments for correction of errors in this initial compilation to George C. Marshall Space Flight Center, Quality and Reliability Assurance Laboratory (R-QUAL-OT), Huntsville, Alabama 35812.

ACKNOWLEDGMENTS

This handbook was prepared by the Convair Division of General Dynamics Corporation under NASA Contract NAS8-20185. Assistance in the form of process data, technical reviews, and technical advice was provided by a great many companies and individuals. The following listing is an attempt to acknowledge this assistance and to express our gratitude for the high degree of interest exhibited by the firms, their representatives, and other individuals who, in many cases, gave considerable time and effort to the project.

Aerojet-General Corp.; Automation Industries, Inc., Sperry Products Division; AVCO Corporation; The Boeing Company; Douglas Aircraft Co., Inc.; Grumman Aircraft; Lockheed Aircraft Co.; Magnaflux Corp.; The Martin Co. (Denver); McDonnell Aircraft Corp.; North American Aviation, Inc.; Rohr Corporation; Southwest Research Institute; St. Louis Testing Laboratories, Inc.; Uresco, Inc.; X-Ray Products Corp.

CLASSROOM TRAINING HANDBOOK
MAGNETIC PARTICLE TESTING

CHAPTER 1 . . . . . INTRODUCTION

CHAPTER 2 . . . . . PRINCIPLES OF MAGNETIC PARTICLE TESTING

CHAPTER 3 . . . . . MAGNETIC PARTICLE TEST EQUIPMENT

CHAPTER 4 . . . . . MEDIUMS AND THEIR PREPARATION

CHAPTER 5 . . . . . MAGNETIC PARTICLE APPLICATIONS

CHAPTER 6 . . . . . CLASSIFICATION OF DISCONTINUITIES

CHAPTER 7 . . . . . COMPARISON AND SELECTION OF NDT PROCESSES

CHAPTER 1: INTRODUCTION
TABLE OF CONTENTS

Paragraph		Page
100	GENERAL	1-3
101	PURPOSE	1-3
102	DESCRIPTION OF CONTENT	1-3
	1. Arrangement	1-3
	2. Locators	1-3
103	INDUSTRIAL APPLICATIONS OF MAGNETIC PARTICLE TESTING	1-4
104	TESTING PHILOSOPHY	1-4
105	PERSONNEL	1-4
106	TESTING CRITERIA	1-4
107	TEST PROCEDURES	1-4
108	TEST OBJECTIVE	1-5

CHAPTER 1: INTRODUCTION

100 GENERAL

The complexity and expense of space programs dictate fabrication and testing procedures that insure reliability of space vehicles and associated ground support equipment. Nondestructive testing (testing without destroying) provides many of these procedures. Of the number of nondestructive test procedures available, the magnetic particle tests, with which this handbook is concerned, is one of the oldest nondestructive test methods and a proven tool.

101 PURPOSE

The purpose of this handbook is to provide the fundamental knowledge of magnetic particle testing required by quality assurance and test personnel to enable them to: ascertain that the proper test technique, or combination of techniques, is used to assure the quality of the finished product; interpret, evaluate, and make a sound decision as to the results of test; and recognize those areas of doubtful test results that require either retest or assistance in interpretation and evaluation.

102 DESCRIPTION OF CONTENTS

1. ARRANGEMENT

The material contained in this handbook is presented in a logical sequence and consists of:

a. Chapter 1: Introduction and testing philosophy

b. Chapter 2: Principles of magnetic particle testing, describing theory, fields, current and demagnetization

c. Chapter 3: Magnetic particle test equipment, equipment and accessories consideration, and their operation

d. Chapter 4: Mediums, their characteristics, application, and preparation

e. Chapter 5: Magnetic particle applications, classification of magnetization methods, surface preparation, and demagnetization requirement

f. Chapter 6: Magnetic particle indications, their characteristics, classification by origin, and preservation

g. Chapter 7: Comparison and selection of NDT processes

2. LOCATORS

The first page of each chapter consists of a table of contents for the chapter. Major paragraphs, figures, and tables are listed in each table of contents.

103 INDUSTRIAL APPLICATIONS OF MAGNETIC PARTICLE TESTING

Because magnetization of certain metals is possible, a medium having magnetic attraction is applied to the surface of the test object after or during induction of a magnetic field, thereby detecting certain discontinuities which are present in the material. Since magnetic particle testing is capable of revealing discontinuities (variations in material composition) economically, it is one of the most used nondestructive test methods.

104 TESTING PHILOSOPHY

The basic reason for use of nondestructive testing is to assure maximum reliability of space and associated ground supporting hardware, fabricated of many materials. To accomplish such reliability, standards have been set and test results must meet these rigid NASA standards.

105 PERSONNEL

It is imperative that personnel responsible for magnetic particle testing be trained and highly qualified with a technical understanding of the test equipment, the item under test (specimen), and the test procedures. Quality assurance personnel must be equally qualified. To make optimum use of magnetic particle testing, personnel conducting tests must continually keep abreast of new developments. There is no substitute for knowledge.

106 TESTING CRITERIA

When required by appropriate documentation, every vehicle and support article must be tested using applicable Nondestructive Testing techniques. The criteria is part of a building block test philosophy which dictates that each item must be tested individually before it is required to perform in sub-assemblies which are in turn tested individually before they are required to perform in assemblies. Using this approach, unsatisfactory and faulty articles are discovered at the earliest possible time, resulting in higher system reliability and reduced cost.

107 TEST PROCEDURES

Approved procedures for magnetic particle testing are formulated from analysis of the test specimen, review of past history, experience on like or similar specimens, and information available concerning similar specimen discontinuities. It is the responsibility of personnel conducting or checking test to insure that test procedures are adequately performed, and that the test objective is accomplished. Procedures found incorrect or inadequate must be brought to the attention of responsible supervision for correction and incorporation into revised procedures.

106 TEST OBJECTIVE

1. The objective of magnetic particle testing is to insure product reliability by providing a means of:

a. Obtaining a visual image of an indication related to a discontinuity in or on the surface of a material.

b. Disclosing the nature of discontinuities without impairing the material.

c. Separating acceptable and unacceptable material in accordance with predetermined standards.

2. No test is successfully completed until an evaluation of the test results is made. Evaluation of test procedures and results requires understanding of the test objective.

CHAPTER 2: PRINCIPLES OF MAGNETIC PARTICLE TESTING
TABLE OF CONTENTS

Paragraph		Page
200	GENERAL	2-5
201	THEORY OF MAGNETISM	2-5
	1. General	2-5
	2. Magnetic Poles	2-5
	3. Magnetic Field	2-6
	4. Lines of Force	2-6
	5. Longitudinal Magnetization	2-7
	6. Horseshoe Magnet	2-7
	7. Vector Field	2-7
	8. Consequent Poles	2-8
	9. Distorted Fields	2-8
	10. Leakage Fields	2-9
202	MAGNETIC MATERIALS	2-10
203	ELECTRICALLY INDUCED MAGNETIC FIELDS	2-10
	1. General	2-10
	2. Right-Hand Rule	2-11
	3. Coil	2-11
	4. Magnetic Flux	2-11
	5. Flux Density	2-12
	6. Permeability	2-12
	7. Reluctance	2-12
	8. Residual Magnetism	2-12
	9. Retentivity	2-12
	10. Coercive Force	2-13
204	HYSTERESIS LOOP	2-13
	1. General	2-13
	2. Virgin Curve	2-13
	3. Residual Magnetism	2-13
	4. Coercive Force	2-14
	5. Reversed Polarity	2-14
	6. Curve Characteristics	2-14
205	CIRCULAR AND LONGITUDINAL MAGNETIZATION	2-14
	1. General	2-14
	2. Circular Magnetization	2-15
	3. Longitudinal Magnetization	2-16

TABLE OF CONTENTS (CONT)

Paragraph		Page
206	FIELD DISTRIBUTION IN MAGNETIC AND NONMAGNETIC CONDUCTORS	2-16
	1. General	2-16
	2. Solid Nonmagnetic Conductor	2-17
	3. Solid Magnetic Conductor	2-17
	4. Hollow Nonmagnetic Conductor	2-17
	5. Hollow Magnetic Conductor	2-19
	6. Alternating Current Field Distribution	2-19
	7. Direct Current Residual Fields	2-21
	8. Alternating Current Field Distribution	2-21
207	MAGNETIZING CURRENT CHARACTERISTICS	2-22
	1. General	2-22
	2. Alternating Current	2-22
	3. Half-Wave Rectified Current	2-23
	4. Penetration Characteristics	2-24
208	CURRENT REQUIREMENTS	2-24
	1. General	2-24
	2. Circular Magnetization	2-25
	3. Longitudinal Magnetization	2-26
	4. Prod Magnetization	2-28
209	THEORY OF DEMAGNETIZATION	2-28
	1. General	2-28
	2. Alternating Current Demagnetization	2-28
	3. Direct Current Demagnetization	2-29
	4. Efficiency of Demagnetization	2-30

Figure 2-1	Orientation of Molecules	2-5
Figure 2-2	Attraction and Repulsion	2-6
Figure 2-3	Magnetic Field Surrounding Bar Magnet	2-6
Figure 2-4	Poles in Straight Bar, Horseshoe, and Broken Magnet	2-7
Figure 2-5	Vector Field Diagram	2-8
Figure 2-6	Consequent Poles	2-8
Figure 2-7	Cut and Fused Bar-Magnet Illustrating Opposite Polarity	2-9
Figure 2-8	Leakage Fields Around Discontinuities	2-9
Figure 2-9	Right-Hand Rule	2-11
Figure 2-10	Longitudinal Field Around Coil	2-12
Figure 2-11	The Hysteresis Curve	2-13
Figure 2-12	Hysteresis Loop Characteristics	2-14
Figure 2-13	Circular Magnetization by Direct and Indirect Current Induction	2-15

TABLE OF CONTENTS (CONT)

Paragraph		Page
Figure 2-14	Longitudinal Magnetization	2-16
Figure 2-15	Field Distribution In and Around a Nonmagnetic Conductor	2-17
Figure 2-16	Field Distribution In and Around a Solid Magnetic Conductor	2-18
Figure 2-17	Field Distribution In and Around a Hollow NonMagnetic Conductor	2-18
Figure 2-18	Field Distribution In and Around a Hollow Magnetic Conductor	2-19
Figure 2-19	Field Distribution In and Around a Hollow Magnetic Cylinder With Central Conductor	2-20
Figure 2-20	Field Distribution In and Around Solid Magnetic Conductor Carrying Alternating Current	2-20
Figure 2-21	Field Distribution In and Around a Hollow Magnetic Conductor Carrying Alternating Current	2-21
Figure 2-22	Single Phase Alternating Current Wave-Form	2-22
Figure 2-23	Rectification of Alternating Current to Half-Wave Direct Current	2-23
Figure 2-24	Threshold Sensitivities of Various Metals	2-24
Figure 2-25	Circular Magnetization of Typical Specimens Using Head-Shot or Central Conductor	2-26
Figure 2-26	Demagnetization Flux-Curve Projected from Hysteresis Curve	2-29
Figure 2-27	Demagnetization Coil	2-29
Table 2-1	Magnetic Characteristics of Materials	2-10
Table 2-2	Magnetizing Current for Solid and Tubular Articles	2-25

CHAPTER 2: PRINCIPLES OF MAGNETIC PARTICLE TESTING

200 GENERAL

Magnetic particle testing is a relatively easy and simple test method that can be applied to finished articles, billets, hot rolled bars, and forgings. It can also be used to check processing operations, such as heat treat, machining, and grinding. Magnetic particle testing consists of magnetization of the article, application of a magnetic medium, and interpretation of the magnetic medium patterns.

201 THEORY OF MAGNETISM

1. GENERAL

An object is magnetized when part or all of its molecules have their north and south poles oriented. (See Figure 2-1.)

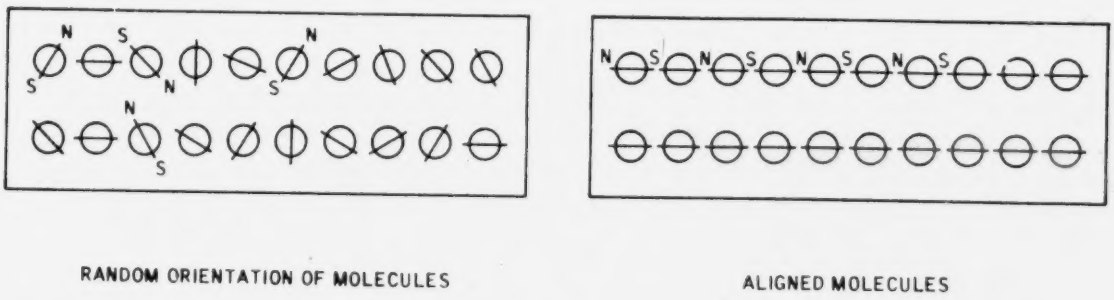

Figure 2-1. Orientation of Molecules

2. MAGNETIC POLES

A body which possesses the ability to attract iron pieces is called a magnet. Magnets may be permanent, retaining their magnetism more or less permanently; or temporary, retaining their magnetism only as long as a magnetizing force is being applied. The ability of the magnet to attract or repel is not uniform over its surface, but is concentrated at local areas called poles. Each magnet has at least two opposite poles, which are attracted by the earth's magnetic poles; hence, the poles are respectively called the north and south poles. The attraction and repulsion of poles are illustrated in Figure 2-2.

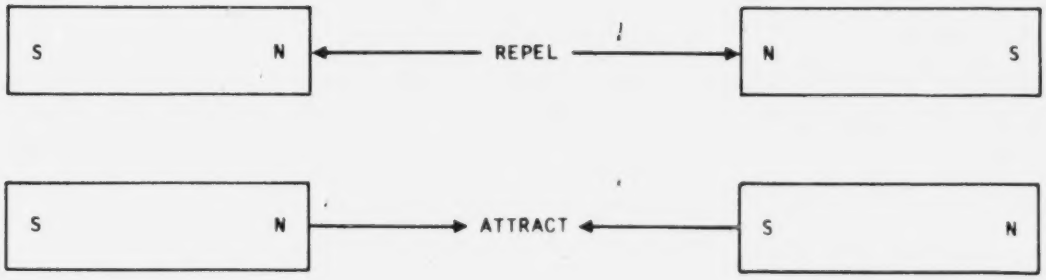

Figure 2-2. Attraction and Repulsion

3. MAGNETIC FIELD

A magnetic field exists within and around a permanent magnet or around a conductor carrying an electric current. The magnetic field surrounding a permanent bar magnet has polarity, but the magnetic field surrounding a conductor does not. As an example, the earth itself can be thought of as a bar magnet because of its two poles. Quite frequently the field surrounding the earth strongly magnetizes large ferromagnetic objects that lie aligned with the earth's poles for periods of time.

4. LINES OF FORCE

The concept of lines of force is useful for describing a magnetic field. As illustrated in Figure 2-3, a bar magnet is covered with a sheet of paper and iron filings are

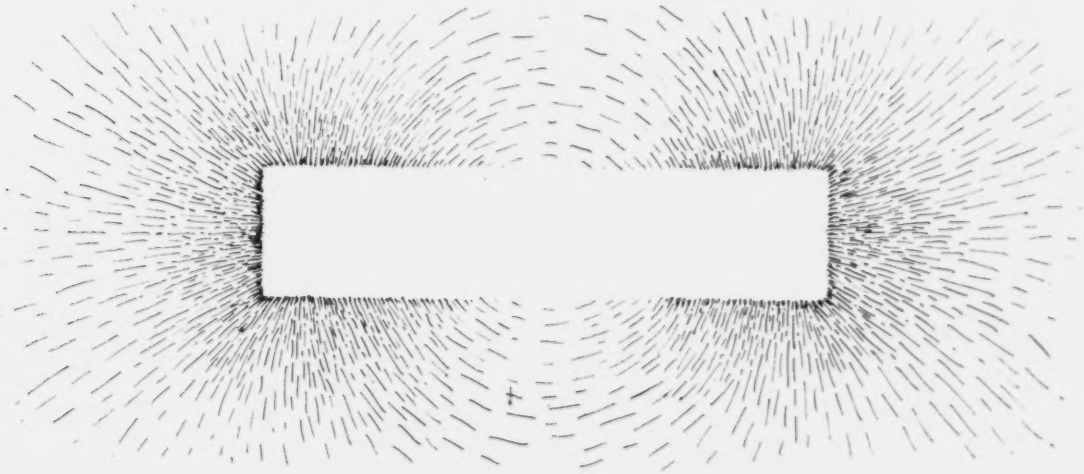

Figure 2-3. Magnetic Field Surrounding Bar Magnet

scattered over the paper. The lines of force arrange themselves in characteristic patterns. They never cross; they seek the path of least resistance; they are most densely packed at the poles of the magnet; and they flow from north to south outside the magnet, but from south to north within the magnet.

5. LONGITUDINAL MAGNETIZATION

A permanent bar magnet is the simplest example of longitudinal magnetization. Since the direction of the magnetic flux is axial, it usually has two poles. Longitudinal magnetization is said to exist in an object when the flux lines traverse in a direction essentially parallel to one of its axes.

6. HORSESHOE MAGNET

If a straight bar magnet is bent, it becomes a horseshoe magnet. When the magnet is bent further to make a complete loop and the ends are fused together, the poles disappear; i.e., a closed magnetic circuit is formed. If the circle is cut, either partially or all the way through, the poles reappear as shown in Figure 2-4.

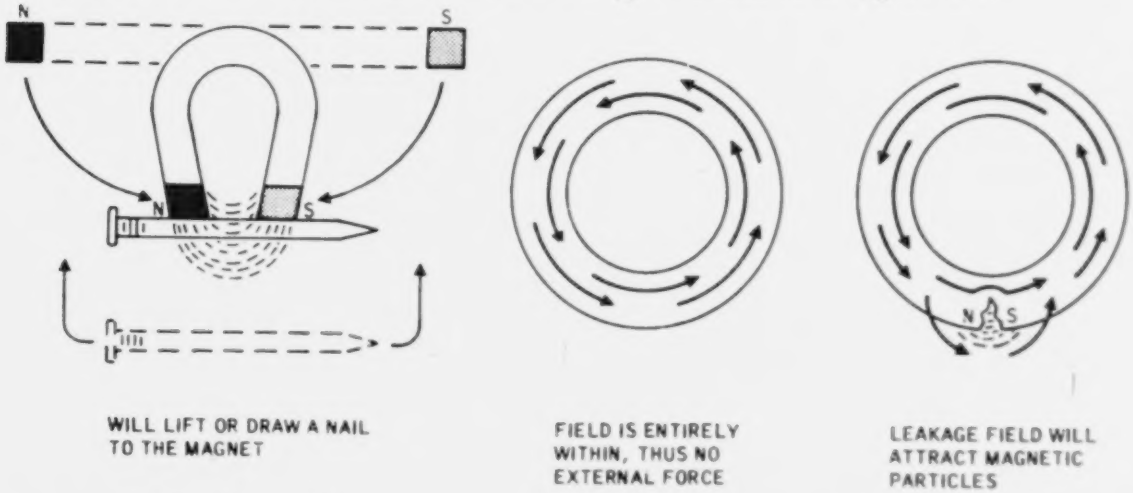

Figure 2-4. Poles in Straight Bar, Horseshoe, and Broken Magnet

7. VECTOR FIELD

Two magnetizing forces may be imposed simultaneously upon the area of a magnetizable object. When this occurs, the two fields do not exist independently; that is, the object is not magnetized in two directions at once, but a vector field is formed which is the resultant in direction and strength of the two imposed fields. This phenomenon is illustrated in Figure 2-5, where F_a is the first magnetizing force, F_b, the second magnetizing force, and F_{a+b} equals the resultant magnetizing force.

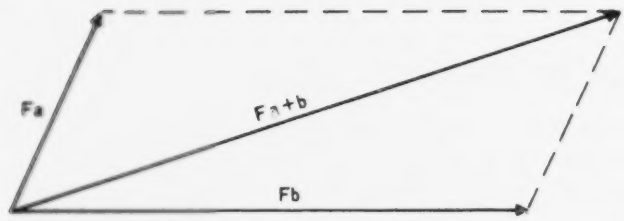

Figure 2-5. Vector Field Diagram

8. CONSEQUENT POLES

Consequent poles exist when more than two poles are present simultaneously in a magnetized object. For example, there may be two north poles and one south pole. Figure 2-6 illustrates a series of poles along the length of an article. Herein lies the principle of magnetic particle testing, since under test particle build-up occurs at each of the poles.

9. DISTORTED FIELD

While it is normal to conceive of magnetic fields as being either circular or longitudinal in many cases the actual field is a combination of the two. This is known as a distorted field. Distorted fields may be produced intentionally, or they may be

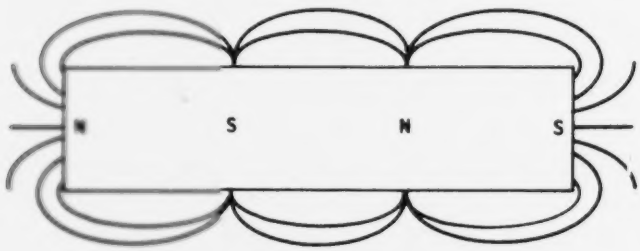

Figure 2-6. Consequent Poles

unavoidable. When produced intentionally, they are of great value in accomplishing the desired result, which is to produce a magnetic field at an angle to the direction of a possible discontinuity. Distorted fields are often helpful and, in some instances essential to the success of certain magnetic particle test procedures.

10. LEAKAGE FIELD

The magnetic field around a bar magnet is shown in Figure 2-2. If a bar magnet is broken in two, making two shorter bars, each immediately becomes a separate bar magnet with a north and a south pole. If the two bars are again fused together, with opposite magnetic poles adjacent, the poles will not completely disappear. A small concentrated leakage field will remain in the fusion area. (See Figure 2-7.) Similarly, if the bar is cut only partially through two opposite poles will appear, and a leakage field will exist in the area of the cut. From Figure 2-8 it can be seen that

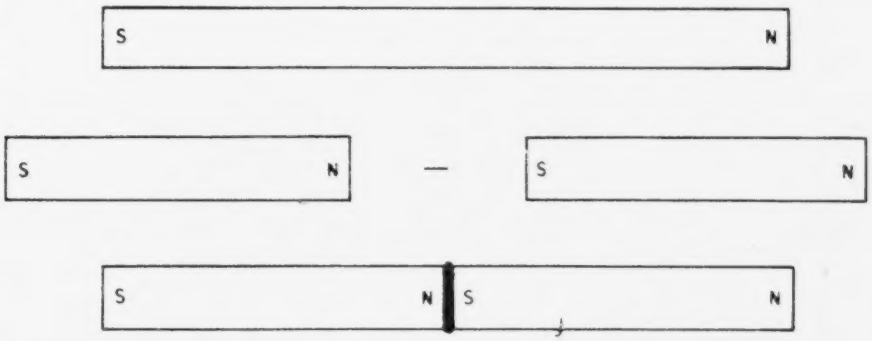

Figure 2-7. Cut and Fused Bar-magnet Illustrating Opposite Polarity

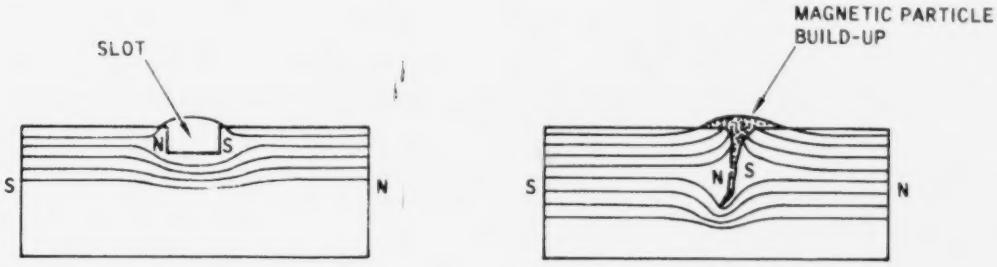

Figure 2-8. Leakage Fields Around Discontinuities

leakage fields are actually magnetic lines of force that leave the bar and pass through the air from one pole to the other of opposite polarity. Since the new opposite poles were created by the interruption of the paths of the lines of force within the magnet; it follows then that nonmetallic inclusions in a magnetized article, or changes in the material of the article, will also cause the creation of two opposite poles and a resultant leakage field. Magnetic particle testing is a process used to detect the presence of leakage fields and thereby the presence of discontinuities, either voids or inclusions.

202 MAGNETIC MATERIALS

Some materials are attracted by a magnet, while others are repelled. From the definition of magnetism it follows that magnetic materials are those which are attracted by magnetism. These materials are known as paramagnetic materials, whereas materials which repel are known as diamagnetic materials. In the realm of magnetic particle testing, the subdivision of paramagnetic, also called ferromagnetic, is a main concern, as only ferromagnetic materials can be strongly magnetized. In Table 2-1, the characteristics of diamagnetic and paramagnetic materials are shown.

Table 2-1. Magnetic Characteristics of Materials.

DIAMAGNETIC MATERIALS	PARAMAGNETIC MATERIALS
CANNOT BE MAGNETIZED	CAN BE MAGNETIZED
ARE REPELLED BY MAGNETISM	ARE AFFECTED BY MAGNETIC FIELDS
	SUB-CLASS OF PARAMAGNETIC (FERROMAGNETIC) MATERIALS
	CAN BE STRONGLY MAGNETIZED
	ARE STRONGLY ATTRACTED TO MAGNETIC FIELDS
	CAN BE MAGNETIC PARTICLE TESTED

203 ELECTRICALLY INDUCED MAGNETIC FIELDS

1. GENERAL

When an electric current passes through a conductor, a magnetic field is formed around the conductor. If the conductor has a uniform shape (a copper rod), the density of the field, i.e., number of lines of force per unit area, is uniform at any point along the conductor, and it uniformly decreases as the distance from the electrical conductor increases. Direction of the magnetic field (lines of force), is at a 90 degree

angle to that of the current in the conductor.

NOTE: For the purpose of simplicity throughout this handbook, magnetizing force is considered to be the total electrical force required to set up a flux in a magnetic circuit. It is usually designated by the letter (H).

2. RIGHT HAND RULE

An easy method for finding the direction of an electrically induced magnetic field is to imagine grasping the conductor in the right hand with the thumb pointing in the direction of current flow. The fingers will then point in the direction of the lines of force. This is the right-hand rule and is shown in Figure 2-9. From this figure it can be seen that the current flow in the conductor creates circular lines of force: (circular magnetic field).

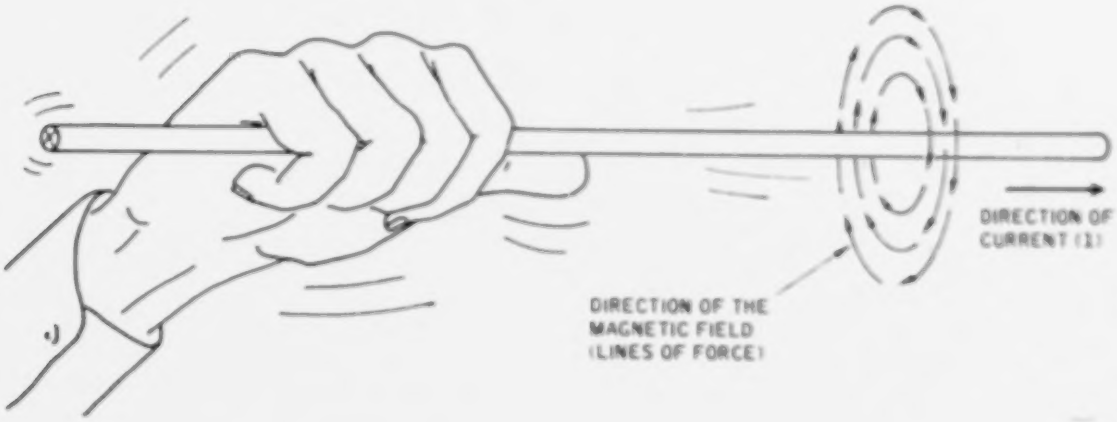

Figure 2-9. Right-Hand Rule

3. COIL

When a current-carrying conductor is formed into a loop, the lines of force circling the conductor form a magnetic field inside and outside the loop, as illustrated in Figure 2-10. Inside the loop the field is similar to that of a bar magnet and is said to be a longitudinal magnetic field. When a coil consists of several loops the magnetic field within the coil is strengthened in proportion to the number of loops.

4. MAGNETIC FLUX

The lines of force in a magnetic circuit always form closed loops or paths; hence, a magnetic circuit is always closed. The total number of magnetic lines existing in a magnetic circuit is called magnetic flux. Its unit is a single line force called the Maxwell, usually designated by the Greek letter Phi.

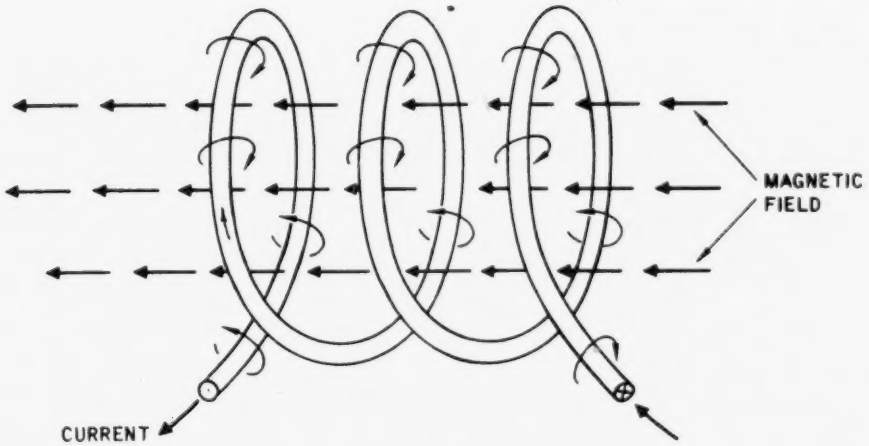

Figure 2-10. Longitudinal Field Around Coil

5. FLUX DENSITY

This is the flux-per-unit area through an element which cuts the unit area at right angles to the direction of the flux. Flux density, or induction, is usually designated by the letter B, and its unit is the gauss.

6. PERMEABILITY

The ease with which a magnetic flux is established in a given material is referred to as permeability. Permeability is numerically equal to B/H, or the ratio of flux density to to magnetizing force. Thus, a material which has high permeability has low reluctance, and vice versa.

7. RELUCTANCE

Reluctance is the opposition of a magnetic material to the establishment of magnetic flux. The reluctance of the material determines the magnitude of the flux produced by a given magnetic force. Reluctance is analogous to the resistance in an electric circuit.

8. RESIDUAL MAGNETISM

Residual magnetism is the amount of magnetism which a magnetic material retains after the magnetizing force is removed.

9. RETENTIVITY

The retentivity of a particular magnetic material is its property to retain to a greater or lesser degree a certain amount of residual magnetism.

10. COERCIVE FORCE

Coercive force is defined as the reverse magnetizing force necessary to remove the residual magnetism so as to demagnetize a specimen.

204 HYSTERESIS LOOP

1. GENERAL

The hysteresis loop (curve) is illustrated in Figure 2-11. This curve is a plot of flux density (B) vs. magnetizing force (H). The test specimen used to plot this curve is a piece of unmagnetized steel.

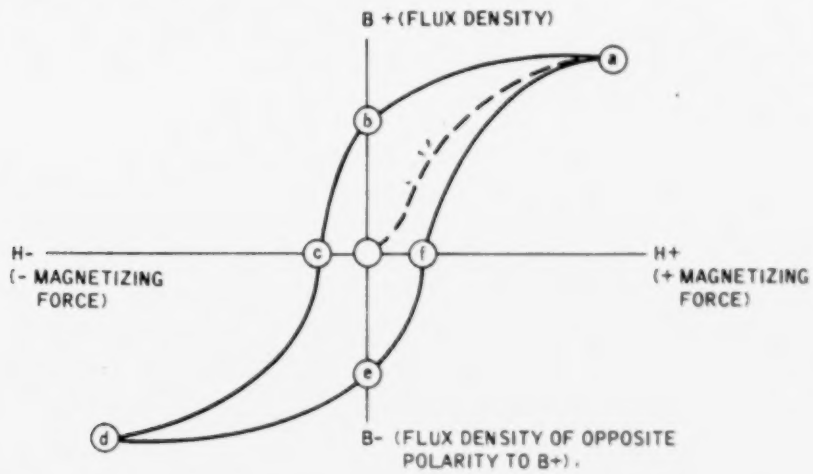

Figure 2-11. The Hysteresis Curve

2. VIRGIN CURVE

Starting from zero (0) with the specimen in the unmagnetized condition and increasing the magnetic force in small increments, the flux in the material increases quite rapidly at first, then more slowly until it reaches a point beyond which any increase in the magnetizing force does not increase the flux density. This is shown by the dotted line o-a, and referred to as the virgin curve of the steel. The specimen is magnetically saturated when it reaches the point where an increase in magnetizing force does not increase the flux density.

3. RESIDUAL MAGNETISM

When the magnetizing force is gradually reduced to zero, the curve a-b results. The amount of magnetism which the steel retains at point b, is called residual magnetism.

4. COERCIVE FORCE

When the magnetizing current is reversed and gradually increased in value, the flux will continue to diminish. The flux does not become zero until point c is reached, at which time the magnetizing force is represented by c-o. The line c-o graphically designates the coercive force in the material.

5. REVERSED POLARITY

As the reversed field is increased beyond c, point d is reached. At this point the specimen is again saturated. The magnetizing force is now decreased to zero and the portion of the d-e line is formed, and retains reverse polarity residual magnetism (B_r) in the specimen. Again increasing the magnetizing force in the original direction completes the curve e-f-a. Now the cycle is complete, and the area within loop (abcdefa) is called the hysteresis curve.

6. CURVE CHARACTERISTICS

The definite lag between the magnetization force and the flux throughout the cycle, is called hysteresis. A wide hysteresis loop, for example, indicates that the material having high reluctance is difficult to magnetize. On the other hand, such material contains a considerable residual field, high retentivity, and probably makes a good magnet. If the loop is slender, the indication means the material has low retentivity (low residual field) and is easy to magnetize (low reluctance). The theory of the hysteresis loop is illustrated in Figure 2-12.

205 CIRCULAR AND LONGITUDINAL MAGNETIZATION

1. GENERAL

As determined by the specimen under test and available equipment either circular or

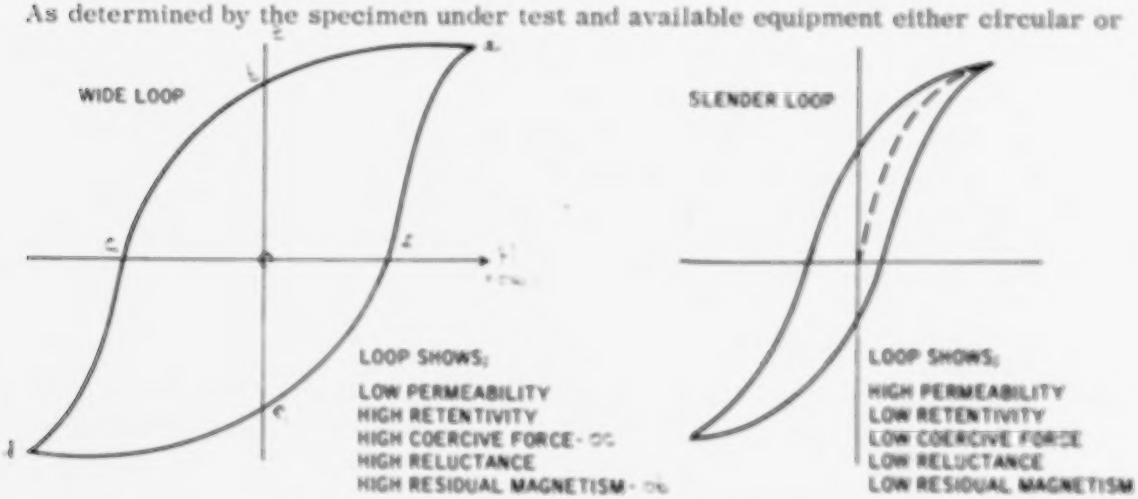

Figure 2-12. Hysteresis Loop Characteristics

longitudinal magnetization is used with magnetic particle testing. Methods of inducing these types of magnetization in a specimen are discussed in the following paragraphs.

2. CIRCULAR MAGNETIZATION

A circular magnetic field is induced into a specimen by either direct magnetization, i.e., passing the current directly through the article, or indirectly, i.e., through a conductor surrounded by a hollow article.

a. Direct Induction: Direct induction of a circular field into an article is accomplished by passing a current through the article as shown in Figure 2-13a. This method illustrated is called a head shot.

b. Direct Induction Using Prods. Another direct method of inducing and establishing a circular field into a specimen, is by the use of prods. Prod magnetization is used where the size or location of an article does not permit the use of a head shot or central conductor. Current flow and field distribution are shown in Figure 2-13b.

c. Indirect Induction. In the indirect method of inducing a circular field, the specimen to be magnetized is placed so that a current-carrying conductor induces a magnetic field into the specimen. This method is known as the central conductor technique and is illustrated in Figure 2-13c.

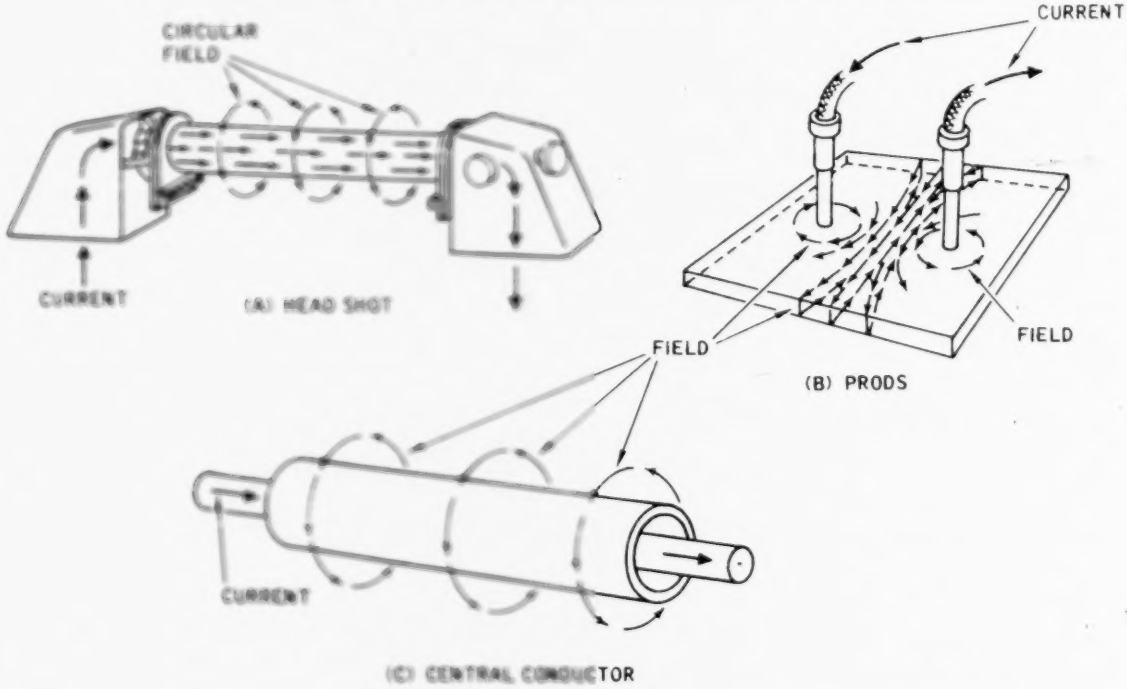

Figure 2-13. Circular Magnetization by Direct and Indirect Current Induction

3. LONGITUDINAL MAGNETIZATION

Longitudinal magnetization of a specimen is accomplished by the use of longitudinal fields set up in a coil or solenoid.

a. Coil (Solenoid). When the length of a specimen is several times its diameter or cross section, the specimen may be successfully magnetized by placing it lengthwise in the field of the coil or solenoid. This is referred to as a "coil shot," and is shown in Figure 2-14a.

NOTE: In a coil whose diameter exceeds its length, the field strength at its center line is approximately proportional to the current (in amperes) times the number of turns of the coil. Thus field strength is usually indicated in units of ampere-turns.

b. Yoke. A yoke may be used to magnetize a specimen longitudinally. Essentially, it is a temporary horseshoe magnet made of soft, low retentivity iron, which is magnetized by a small coil wound around its horizontal bar. When the energized yoke is placed on a specimen (see Figure 2-14b), the flux flow from the yoke's south pole through the specimen to the north pole induces a local longitudinal field in the specimen.

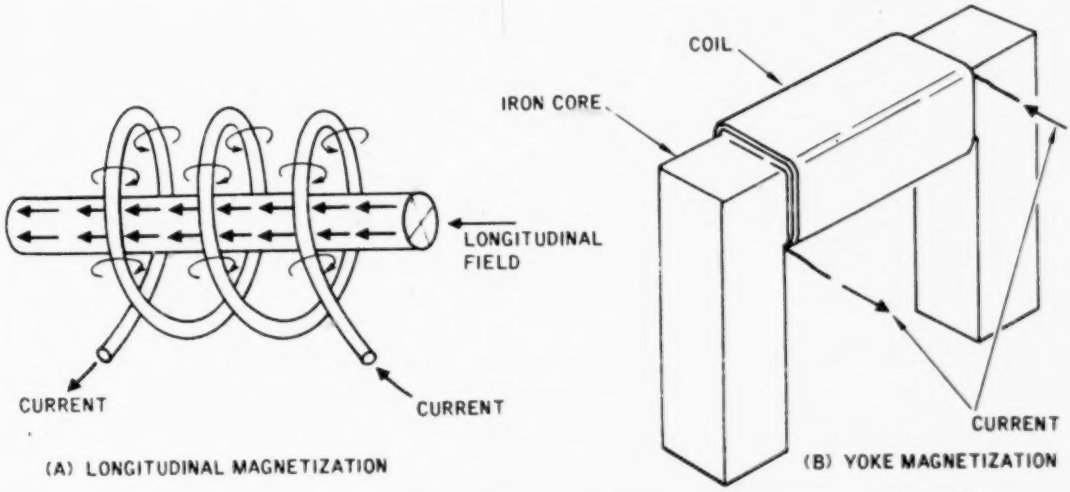

Figure 2-14. Longitudinal Magnetization

206 FIELD DISTRIBUTION IN MAGNETIC AND NONMAGNETIC CONDUCTORS

1. GENERAL

Normally, either a solid or hollow central conductor is used in magnetic particle testing of hollow specimens such as, pipe, tubing, rings, flanges, nuts, etc. The magnetic field strength within and around a current-carrying conductor varies with the type, size and shape of the conductor, i.e., length, diameter, and material.

2. SOLID NONMAGNETIC CONDUCTOR

When current is passed directly through a solid nonmagnetic conductor, such as a copper bar, the following observations hold true:

a. The magnetic field strength varies from zero at the center to a maximum at the surface.

b. The field strength at the surface of the conductor decreases as the radius of the conductor increases; for example, if the current is held constant and the radius of the conductor is doubled, the field strength at the surface is halved.

c. When current is increased, the field strength increases in proportion, i.e., doubling the current doubles the field strength.

d. The field strength outside the conductor diminishes with the distance from the central conductors center, for example, the field at two times the radius from the center is half the field at the surface. (See Figure 2-15.)

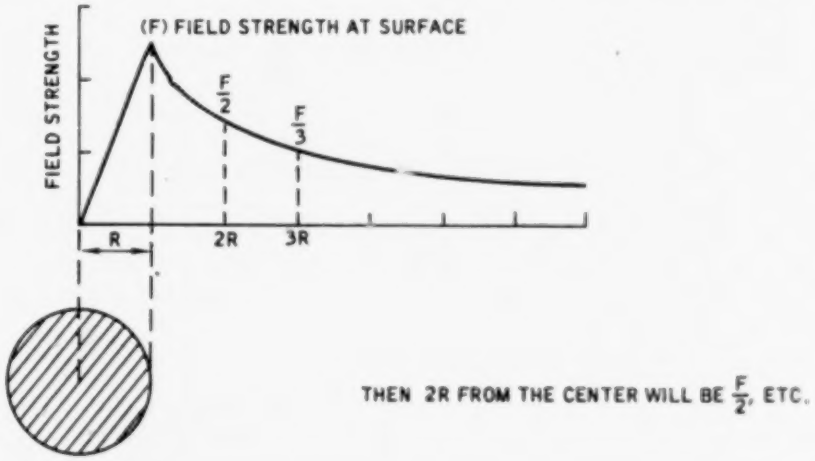

Figure 2-15. Field Distribution In and Around a Nonmagnetic Conductor

3. SOLID MAGNETIC CONDUCTOR

The strength of a field within a solid magnetic conductor, such as steel, is much greater than in a solid nonmagnetic conductor because of the permeability of steel. The field strength outside a solid conductor is exactly the same with either a magnetic or nonmagnetic conductor if the current and radius are unchanged. (See Figure 2-16.)

4. HOLLOW NONMAGNETIC CONDUCTOR

In a hollow nonmagnetic circular conductor there is no current flow or magnetic field within the void. The field, zero at the inner surface, increases to maximum at the

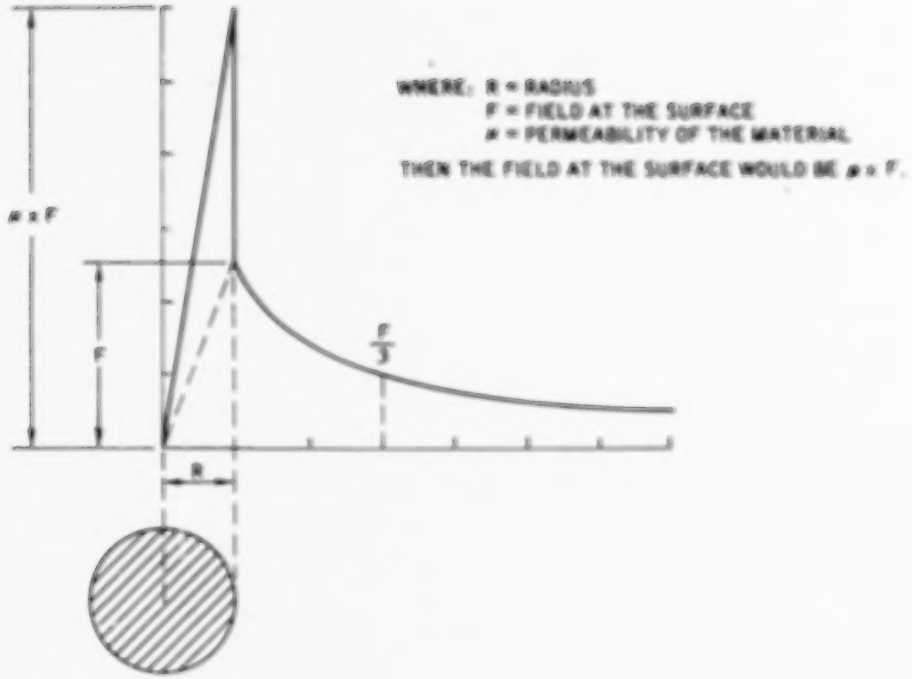

Figure 2-16. Field Distribution In and Around a Solid Magnetic Conductor

outer surface. If a hollow nonmagnetic and a solid nonmagnetic conductor have the same outer diameter and the same current flow their outer surface field strengths are equal. Figure 2-17 illustrates the field distribution in and around a hollow nonmagnetic conductor.

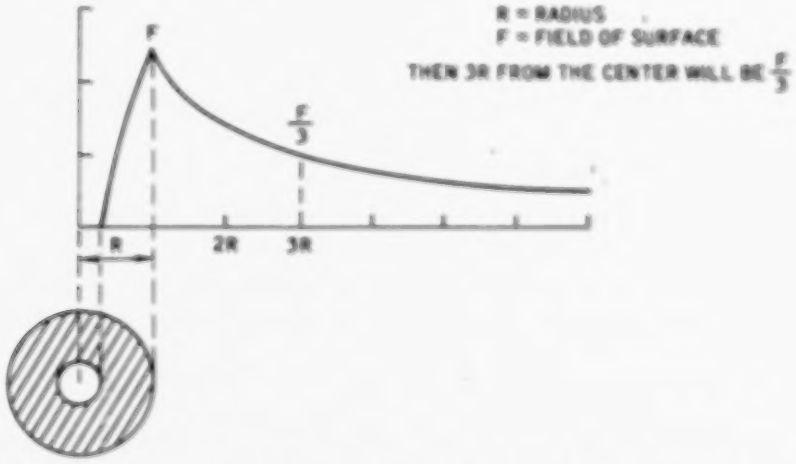

Figure 2-17. Field Distribution In and Around a Hollow Nonmagnetic Conductor

5. HOLLOW MAGNETIC CONDUCTOR

When a hollow magnetic conductor is used, the permeability factor is again considered. Referring to Figure 2-18, the field strength at the outer surface of a hollow magnetic conductor is the same as that for the solid magnetic conductor, if their outer diameter and current flow are identical. The field strength at the inner surface is zero and the field outside the conductor is the same as for other conductors. See Figure 2-19.

6. ALTERNATING CURRENT FIELD DISTRIBUTION

In the foregoing discussion the use of direct current (dc) magnetization has been assumed; however, most of the rules concerning field distribution do not hold true when alternating current (ac) magnetization is used. Alternating current tends to flow near the surface of a conductor, even at commercial frequencies (60 cycles) this tendency is appreciable. This phenomena is known as "skin effect."

a. Solid Magnetic Conductor. In the case of a solid magnetic conductor carrying alternating current, the field distribution is similar to that shown in Figure 2-20. The field strength outside the conductor at any instant decreases in exactly the same way as when direct current is used as the magnetizing force. It must be remembered however, that while alternating

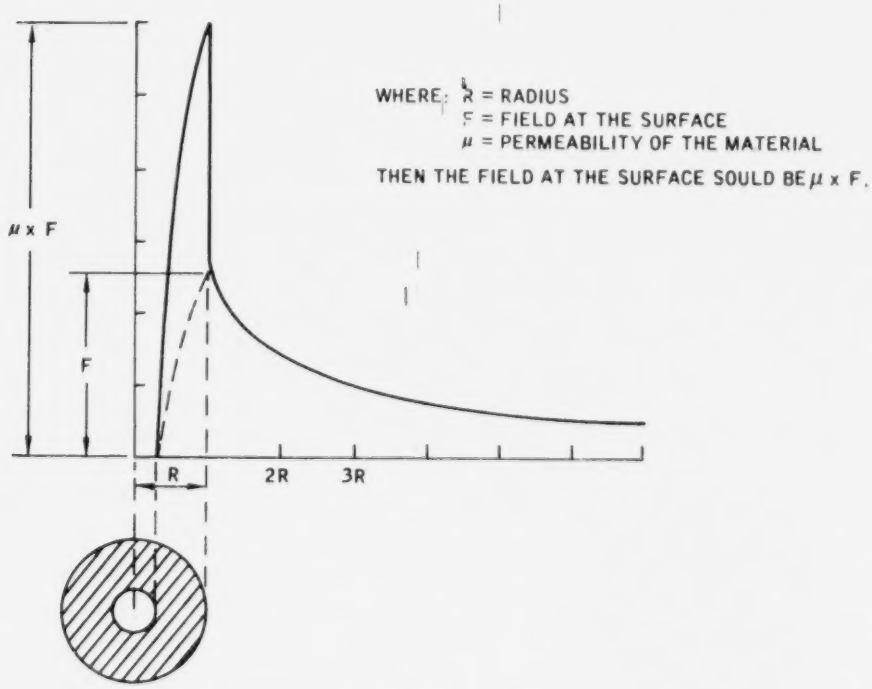

Figure 2-18. Field Distribution In and Around a Hollow Magnetic Conductor

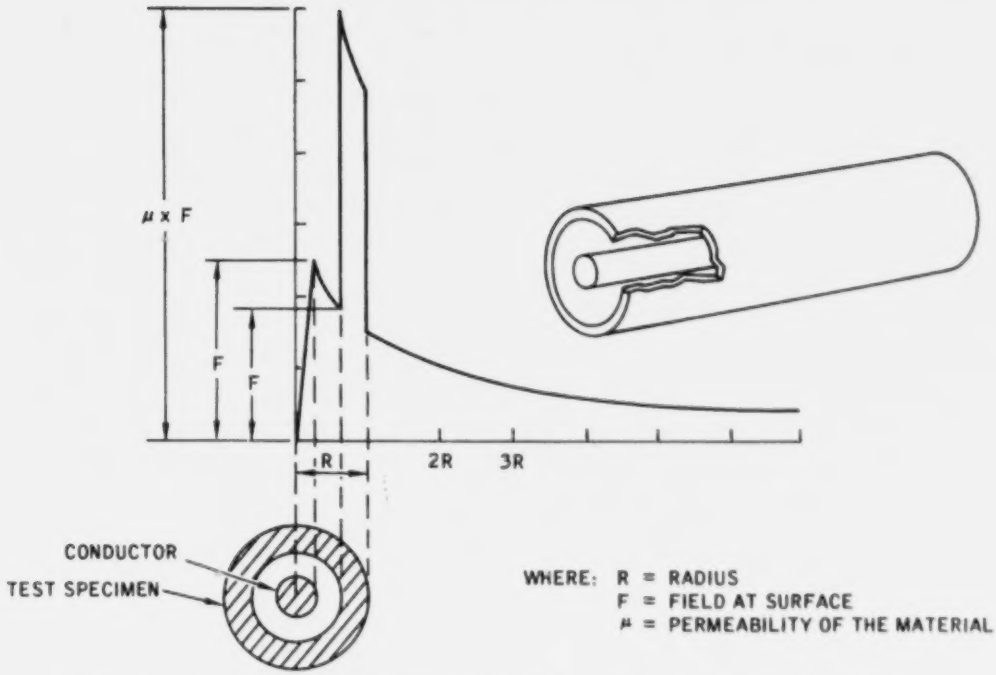

Figure 2-19. Field Distribution In and Around a Hollow Magnetic Cylinder With Central Conductor

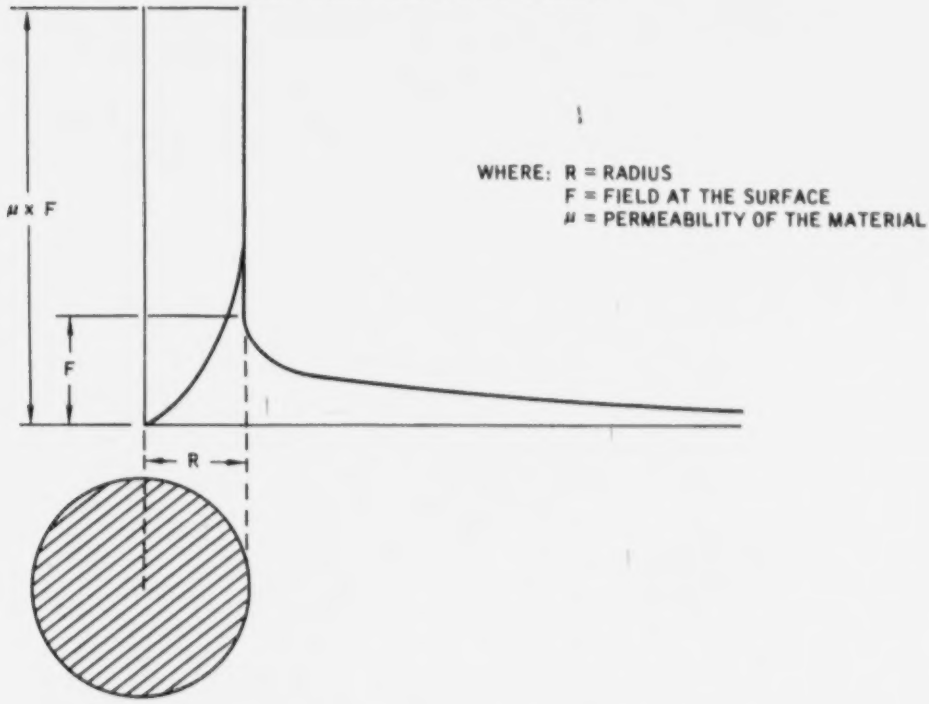

Figure 2-20. Field Distribution In and Around Solid Magnetic Conductor Carrying Alternating Current

current is flowing, the field is constantly varying both in strength and direction.

b. Hollow Magnetic Conductor. Similar differences in field distribution also occur with a hollow magnetic conductor, when alternating current is used for magnetization. This is shown in Figure 2-21.

7. DIRECT CURRENT RESIDUAL FIELDS

Residual circular fields remaining in magnetic conductors after dc magnetizing current is removed will be distributed in much the same pattern as when the current was flowing. When the dc is reduced to zero, the field will have less intensity, will conform to the distribution pattern shown in Figure 2-16 and, there will be substantially no field external to the conductor. When longitudinal magnetization is used, interruption of the magnetizing dc results in transient currents being induced inside the specimen. These transient currents may slightly modify the strength and direction of the residual field.

8. ALTERNATING CURRENT RESIDUAL FIELDS

When alternating current used for magnetization is gradually reduced to zero no residual field remains in the magnetized article. The article will be completely mag-

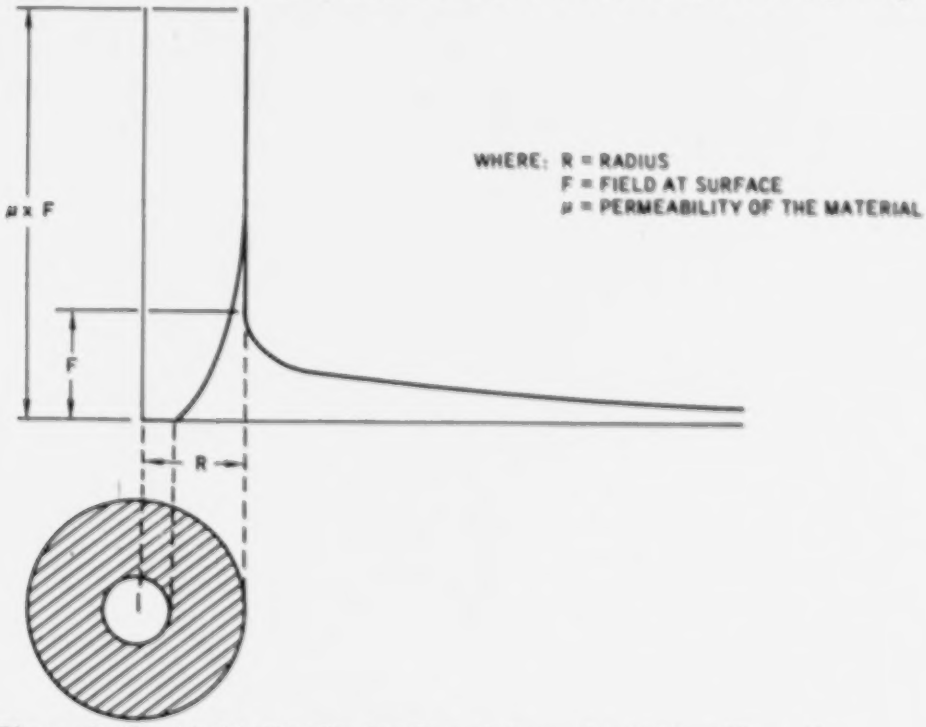

Figure 2-21. Field Distribution In and Around a Hollow Magnetic Conductor Carrying Alternating Current

netized. When the ac is suddenly interrupted a residual field may remain depending upon the point in the current cycle where the interruption occurs. Distribution of any residual circular field remaining after the interruption of the magnetizing ac will be approximately the same as that shown in Figures 2-20 and 2-21.

207 MAGNETIZING CURRENT CHARACTERISTICS

1. GENERAL

Straight direct current, alternating current, and half-wave rectified current are usually used as magnetizing currents in magnetic particle testing. Only one type is required for a test. Straight dc available at 110, 220 or 440 volts is suitable for use with solenoids and yokes. Since dc cannot be stepped down in voltage except by motor generators, it is not suitable for circular magnetization usage where the current must be varied in accordance with the specimen size. It is generally accepted that the best types of magnetizing current for magnetic particle testing are alternating and half-wave rectified currents. Alternating current is best suited for locating surface discontinuities (because of skin effect). Half-wave rectified current (hwdc) is best suited for locating below-the-surface discontinuities.

2. ALTERNATING CURRENT

Alternating current is most often available in voltages ranging from 110 volts through 440 volts. Commonly used single-phase alternating current usually alternates at 60 cycles per second (cps), as shown in Figure 2-22. This type current creates a maximum flux at the surface of the magnetized article, and has relatively little penetrating ability.

a. The advantage of using ac is that the voltage can be stepped up or down. Also, the reversal of magnetic fields, due to the alternating current, makes

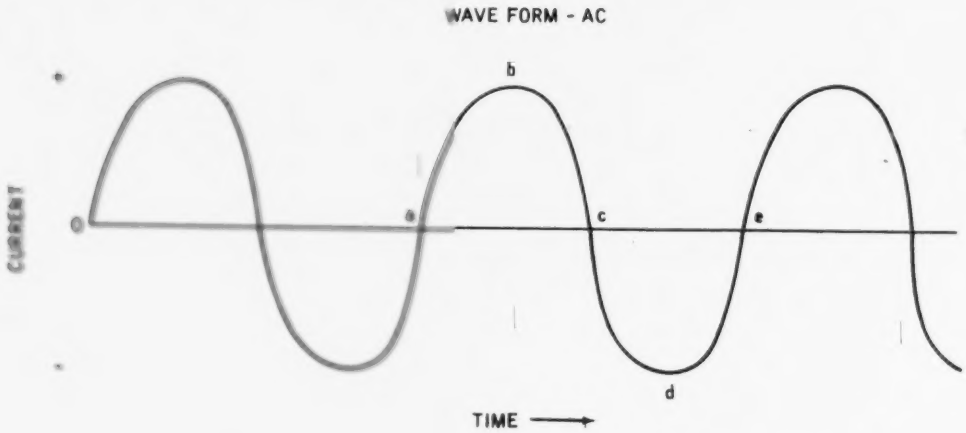

Figure 2-22. Single Phase Alternating Current Wave-Form

the magnetic particles more mobile facilitating their collection at leakage fields.

b. The underlying principle of ac is explained by referring to Figure 2-22. Using this principle, advantage is taken of the hysteresis effect. In Figure 2-22, a is the zero point at the beginning of the current cycle; b, the maximum positive value of the current at the peak of the cycle; c, the mid-point of the cycle in which the direction of the current is reversed, and d, the peak value of the current in the reverse direction; with e, completing the cycle.

3. HALF-WAVE RECTIFIED CURRENT

Low-voltage heavy-current rectifiers to supply rectified current for magnetic particle testing purposes were developed some years ago. The basic half-wave rectifier circuit consists of a rectifier connected in series between the ac voltage source and the circuit load resistance. The rectifier permits current to flow only during the positive half cycles of the applied ac voltage; the circuit current thus becomes a pulsating dc as illustrated in Figure 2-23. The use of rectified current has the following advantages

a. Alternating current at any commercial frequency may be used, and the load distributed over three phases.

b. Penetration is entirely comparable to that of straight dc.

c. The pulsating effect of the rectified wave is helpful in adding mobility to the magnetic particles.

d. There is a definite advantage in locating deep-lying discontinuities.

e. It can be combined in the same equipment with ac.

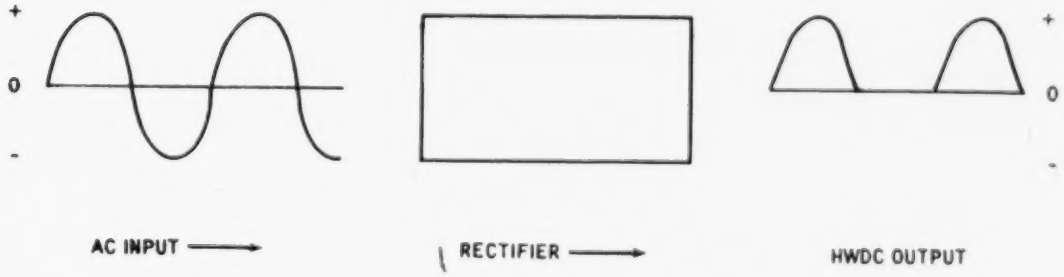

Figure 2-23. Rectification of Alternating Current to Half-Wave Direct Current

4. PENETRATION CHARACTERISTICS

Various tests conclusively prove that the ac method is more sensitive than dc or hwdc, in showing surface discontinuities. Figure 2-24 compares the abilities of various methods. The illustration plots amperage against depth of discontinuity. This experiment was performed, using the test specimen shown to the right in Figure 2-24, and recording the lowest amperage which gave a minimum threshold indication at various discontinuity depths.

208 CURRENT REQUIREMENTS

1. GENERAL

The required amount of magnetizing current is affected by the permeability of the metal, the shape and thickness of the article, and the type of discontinuity sought. The length of an article does not affect the current requirement, because the current flow in a uniform cross section is uniform throughout the length of the article. The electrical resistance (reluctance) of the article, however, will increase with length, therefore requiring more energy to develop the same amperage (or field) through the specimen. When a specimen is not uniform in section, it is necessary to use one value of current for the thinner sections and a second, third, or more values of currents for heavier sections. It is always proper to use the smaller current value

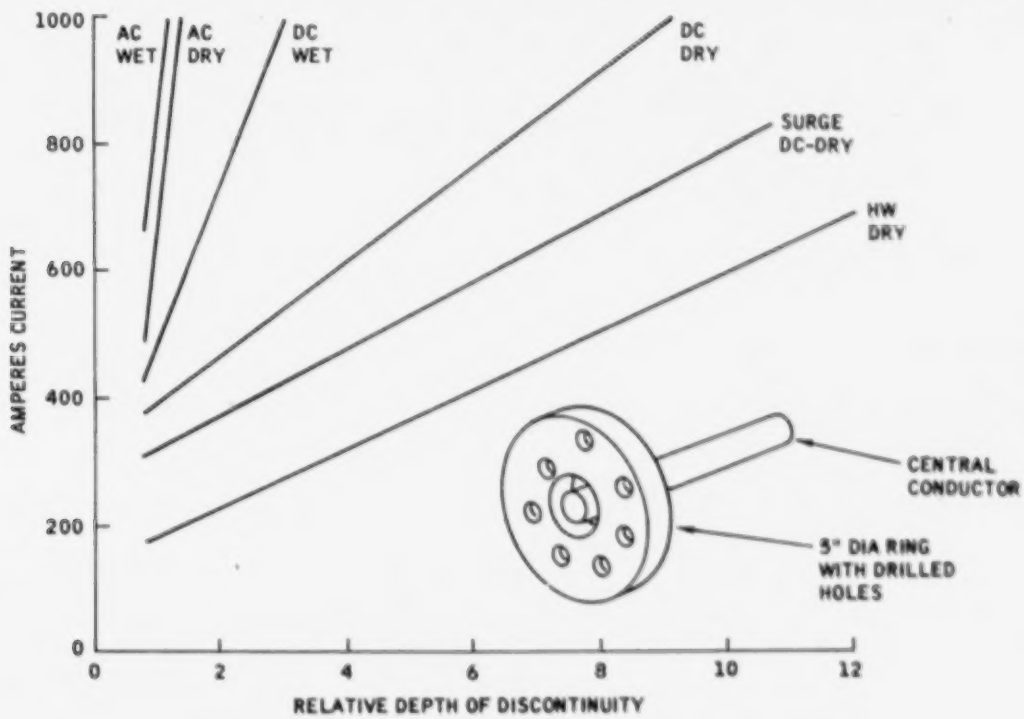

Figure 2-24. Threshold Sensitivities of Various Metals

first to test the thinner section and then successivley higher currents for the testing of the increasingly larger sections. This is to avoid overmagnetization of the thinner sections to the point where the residual field may be higher than the field required for that section. Whenever a higher field has been imposed than the one for a subsequent test, it is necessary to demagnetize the specimen before applying the lower amperage.

2. CIRCULAR MAGNETIZATION

Only current enough to show the indication is used. The best gauge of magnetizing current strength is to keep a test specimen with a typical indication, which is used for reference and checked from time to time. The recommended values for circular magnetization vary because of the different factors involved. An acceptable rule is to use from 800 - 1000 amperes per inch diameter or cross section, when using hwdc; and 500 - 600 amperes when using ac. The amperages shown in Table 2-2, therefore, are only suggested averages for various diameters and cross-sections of articles, and may be incorrect for certain alloys and shapes. The proper direction of magnetizing current and number or concentration of particles are also critical for reliable testing. This does not mean that the value of the magnetizing current is less important, but, rather, that there are other factors which are of equal importance in determining the correct value of current required.

a. Figure 2-25 demonstrates circular magnetization amperage requirements.

(1) Figure 2-25a is a multiple diameter solid specimen, the smaller diameter end being two inches, and the larger, three inches. Following Table 2-2, and recalling the foregoing discussion, the thinner section is magnetic-particle-tested first, requiring 2000 amperes. The second "shot" of the three-inch diameter section requires 3000 amperes.

Table 2-2. Magnetizing Current for Solid and Tubular Articles

TUBULAR AND SOLID ARTICLES		TUBULAR ARTICLES (ON CENTRAL CONDUCTOR)	
GREATEST WIDTH OR DIAMETER IN INCHES	MAGNETIZING CURRENT (APPROX) IN AMPERES	MAXIMUM OUTSIDE DIAMETER IN INCHES*	MAGNETIZING CURRENT (APPROX) IN AMPERES
1/2	500	1/2	500
3/4	700	3/4	750
1	1000	1	1000
1-1/2	1500	1-1/2	1500
2	2000	2	2000
2-1/2	2500	2-1/2	2500
3	3000	3	3000
3-1/2	3500	3-1/2	3500
4	4000	4	4000

*MEASUREMENT OF TUBULAR ARTICLES MUST BE MADE ON THE OUTSIDE DIAMETER, SINCE AMPERAGE DETERMINES THE EFFECTIVE FIELD SURROUNDING CONDUCTOR.

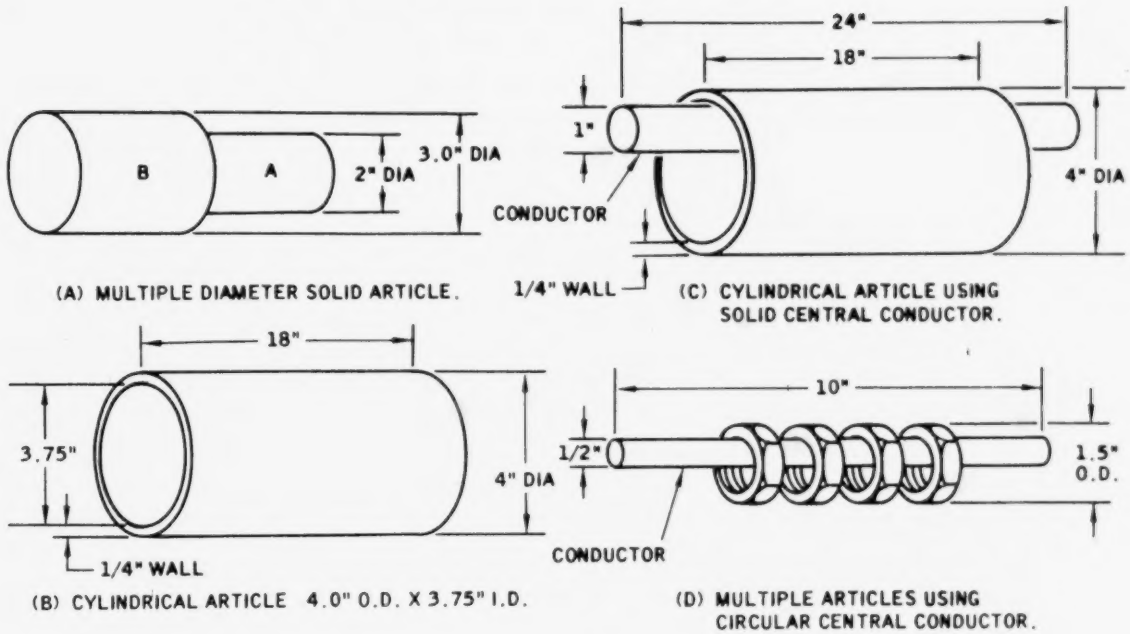

Figure 2-25. Circular Magnetization of Typical Specimens Using Head-Shot or Central Conductor

(a) If the average rule had been applied, the figures would have been 1600 amperes minimum and 2000 amperes maximum for the two-inch diameter.

(b) For the three-inch section, the figures would have been 2400 amperes minimum and 3000 amperes maximum.

(2) Figure 2-25b-c illustrates the same specimen twice, first to be tested by a head shot and then by use of a central conductor. The specimen is a tubular section with an outer diameter of 4 inches and an inner diameter of 3.75 inches. It can be seen from Table 2-2, that in either case, the current required is the same, i.e., 4000 amperes.

(3) Figure 2-25d illustrates a number of smaller specimen (nuts) required to be tested on a central conductor. The maximum outer diameter is 1.5 inches. Again looking at Table 2-2, it shows that 1500 amperes will be required.

3. LONGITUDINAL MAGNETIZATION

When a coil is used, the effective field it creates is determined by the product of the number of amperes and the number of turns in the coil. For example, a current of

800 amperes through a five-turn coil creates a magnetizing force of 4,000 ampere turns. From this it can be seen that it is necessary to know how many turns there are in a coil to be able to caluclate the magnetizing force. On most stationary equipment, this information is usually shown on the coil; if not, it may be obtained from the equipment manufacturer. Another type of coil used is the wrapped cable. This is frequently used when a specimen is either odd shaped or too big to handle in the equipment.

a. L/D Ratio. For reliable coil magnetization (longitudinal), the specimen to be magnetized must have a length at least twice as great as its diameter. This relationship is known as the length-diameter (L/D) ratio. Knowing the L/D ratio and the number of turns in a coil makes it possible to determine the required amperage for coil shots, providing the following conditions are met.

(1) The specimen has an L/D ratio of between 2 and 15.

(2) The specimen or section thereof, to be magnetized is not greater than 18 inches long.

(3) Cross-sectional area of the specimen is not greater than 1/10 the area of the coil opening.

(4) The specimen is positioned in coil with its long axis parallel to the applied field.

(5) The specimen is held against the inside wall of the coil and not positioned in the center of the coil.

b. Finding Correct Amperage. If the foregoing conditions are met, then the formula for determining a correct amperage is simply stated as:

$$AMP = \frac{45,000}{L/D} \quad \frac{1}{T} \quad \text{or} \quad \frac{45,000\ D}{LT}$$

where:

45,000	=	constant
L	=	length
D	=	diameter
T	=	number of turns in coil

c. Use of L/D Ratio. Assuming the specimen is a solid specimen, 12 inches long (L) by 3 inches in diameter (D), and a coil consisting of 5 turns (T) was available, then the required amperage is 2250.

$$\frac{45,000D}{LT} = \frac{45,000 \times 3}{12 \times 5} = 2250 \text{ Amperes}$$

NOTE: The formula may be used for any number of coil turns. Theoretically, the more turns of cable, the stronger the field. There is a limit to the number of turns that will increase the flux density. Also, since the effective field is limited by the size of the coil several shots may be required when testing a long article.

4. PROD MAGNETIZATION

When using portable equipment, the correct flux density is somewhat easier to determine because the use of prods makes it possible to vary either the current setting on the equipment or the spacing between the prods. If the accumulation of particles between the points of the prods is too heavy they tend to band. This indicates that the field strength is too great and should be reduced by either lowering the amperage or increasing the space between the prods. Spacing between the prods varies, depending on the size or thickness of the article to be tested; six to nine inch spacing is found to be effective on larger articles.

209 THEORY OF DEMAGNETIZATION

1. GENERAL

Ferrous materials usually retain some residual magnetism after the magnetizing current is shut off. The strength of the residual field depends upon the permeability of the material, the strength and direction of the magnetizing force. Complete demagnetization is difficult if not impossible to obtain; thus, the process is limited to reducing the residual field in specimens that must be demagnetized to an acceptable level. The basis for all demagnetization methods is the subjecting of the magnetized article to the influence of a continuously reversing magnetic field which gradually reduces in strength. This causes a corresponding reversal and reduction of the field in the article. Although some residual magnetization will remain, this method quickly reduces the field to insignificant proportions. Figure 2-26 shows graphically how the method works. The graph to the right represents the reversing magnetic field in the specimen; to the left are the hysteresis curves corresponding to this action.

2. ALTERNATING CURRENT DEMAGNETIZATION

The most convenient method of demagnetization is with a specially built demagnetization coil. (See Figure 2-27.) When such a coil is energized by passing the current through its windings, it induces a magnetic field on the specimen placed in the coil. Since direction of current flow reverses itself, the polarity of the induced magnetic field also reverses with each reversal of the current. When the specimen is withdrawn from the coil, the magnetic field becomes weaker the further the specimen is withdrawn from the coil. This is accomplished only if the specimen is removed from the influence of the demagnetizing coil while the current is flowing; however, if the

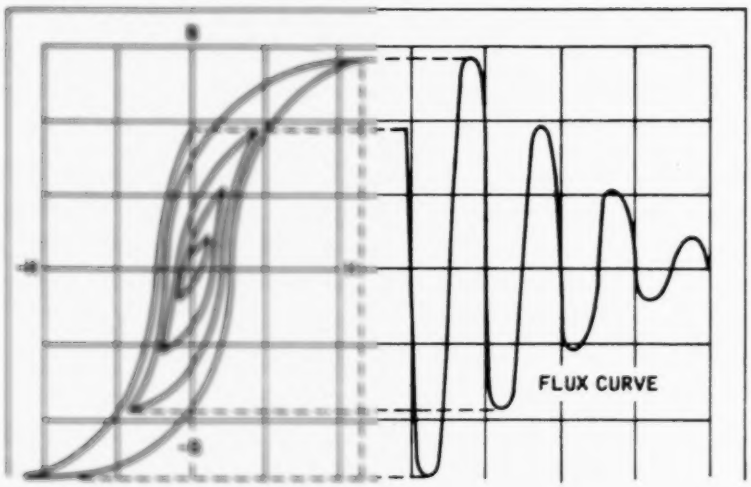

Figure 2-26. Demagnetization Flux-Curve Projected from Hysteresis Curve

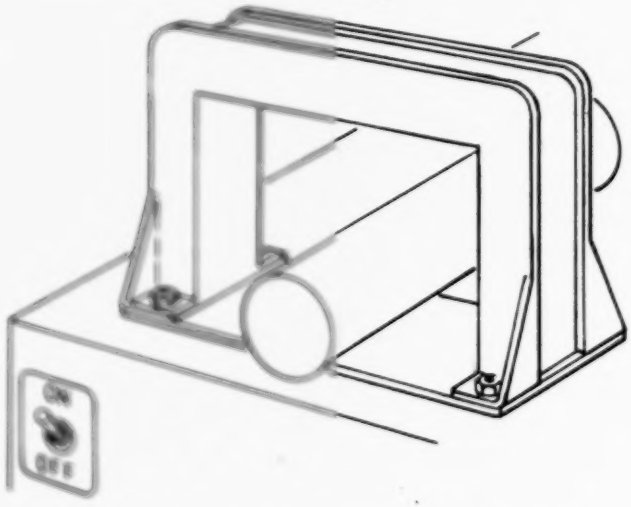

Figure 2-27. Demagnetization Coil

current is stopped while the specimen is still in the magnetic field of influence, it may still retain some magnetism.

3. DIRECT CURRENT DEMAGNETIZATION

Since alternating current does not penetrate very deeply below the surface of the material, some specimens may be difficult to demagnetize completely. This is particularly true with large, heavy, or unusually shaped specimens. Direct current can be used to demagnetize if provision for very fine current control and a means for reversing the direction of the current are made. Demagnetization accomplished with

direct current is usually more complete and effective than with alternating current. Some magnetic particle testing equipment is provided with facilities for dc demagnetization. Without such equipment, demagnetization is a slow operation. Demagnetization is preferably done on individual specimens rather than on groups of specimens.

a. To demagnetize with direct current, the specimen is placed in a coil, connected to a source of direct current. The current is adjusted to a value at least as great as that initially used to magnetize the specimen. A shot of current is given at this initial value. The direction of the current is then reversed, the value reduced, and a shot of current given at the new value. This process of reversing and reducing the current is continued until the lowest value is reached.

b. For best results of demagnetization, the diameter of the demagnetization coil is just large enough to accommodate the specimen. If demagnetization of small specimens is performed in a large coil, they are placed close to the inside wall or corner of the coil, since the demagnetization force is strongest in that area.

4. EFFICIENCY OF DEMAGNETIZATION

For practical purposes, it is always correct to utilize a residue meter (field indicator), after performing demagnetization, to assure that residual field strength has been reduced to a desired level. The field indicator is a small pocket-sized device that measures the strength of a field against a set of small enclosed permanent magnets which restrict the needle movement against a relative scale. When or when not to demagnetize an article depends on a number of factors.

a. Demagnetization is usually required when:

(1) A strong residual field may interfere with subsequent operations, such as welding or machining. Strong fields can "blow" the weld metal as it is deposited, or magnetic chips may cling to the cutting tool and interfere with machining.

(2) The specimen is a moving article of an assembly and deposit of accumulated magnetized particles could cause wear.

(3) Leakage fields may interfere with nearby instruments which work on magnetic principles; for example, compasses or indicators of various types.

(4) Residual fields may interfere with proper cleaning of the specimen.

(5) The specimen is to be magnetized at a lower magnetizing force in a different direction than the original or previous test.

(6) Specified by standard.

b. Demagnetization is usually NOT required or necessary:

(1) On specimens of soft steel or iron where retentivity is low.

(2) If, after the magnetic particle test, the specimen is to be heat-treated.

(3) On large castings, weldments, or vessels where residual fields will have no material effect.

(4) If the specimen is to be magnetized again in another direction at the same or higher amperage.

(5) If the specimen is likely to become remagnetized during handling by being placed on a magnetic chuck, or lifted with an electromagnetic lifting fixture.

CHAPTER 3: MAGNETIC PARTICLE TEST EQUIPMENT
TABLE OF CONTENTS

Paragraph		Page
300	GENERAL	3-3
301	MEDIUM	3-3
	1. General	3-3
	2. Equipment Consideration	3-3
302	WET HORIZONTAL EQUIPMENT	3-3
303	MOBILE EQUIPMENT	3-6
	1. Current and Voltage Selection	3-6
	2. Methods Used with Mobile Equipment	3-6
	3. Operation of Mobile Equipment	3-7
304	PORTABLE EQUIPMENT	3-8
305	DEMAGNETIZATION EQUIPMENT	3-9
306	ACCESSORIES	3-9
307	BLACK LIGHT	3-10

Figure 3-1	Wet Horizontal Magnetic Particle Test Equipment	3-4
Figure 3-2	Mobile Magnetic Particle Test Equipment	3-7
Figure 3-3	Portable Magnetic Particle Test Equipment	3-8
Figure 3-4	Stationary Demagnetization Equipment	3-9

Table 3-1	Table of Contents for Figure 3-1	3-5
Table 3-2	Accessories and Their Use	3-10

CHAPTER 3: MAGNETIC PARTICLE TEST EQUIPMENT

300 GENERAL

The equipment used to process specimens for magnetic particle testing ranges from heavy complex and automated handling systems, weighing several tons, to small light-weight portable units.

301 MEDIUM

1. GENERAL

Medium, as used in this handbook, is defined as that through or by which a force acts, instrumentally; i.e., through which the leakage field caused by the indication being sought acts and is revealed. Medium, in magnetic particle testing, refers to both dry powders and liquids.

2. EQUIPMENT CONSIDERATION

The following leading particulars are considered when selecting equipment for magnetic particle testing:

a. Equipment for wet or dry method.

b. Magnetization requirements (ac or dc).

c. Degree of automation.

d. Demagnetization, whether incorporated or separate equipment.

e. Amperage required.

f. Tank capacity in gallons for wet horizontal equipment.

g. Air supply requirements.

h. Line voltage requirements.

i. Accessories needed or required.

302 WET HORIZONTAL EQUIPMENT

Wet magnetic particle equipment can be built to handle most any length specimen. The average type of equipment illustrated in Figure 3-1 enables magnetization of specimens ranging from a few inches to approximately ten feet in length. To test a specimen, it is clamped between the head and tail stocks. This enables circular magnetization. For longitudinal magnetization the coil is moved so that the area to be tested is encircled by the coil. This type of equipment accommodates both ac and hwdc magnetization. It also incorporates demagnetization power which is supplied in 30 steps by a motor-driven tap switch. The magnetizing current cycle is energized by means

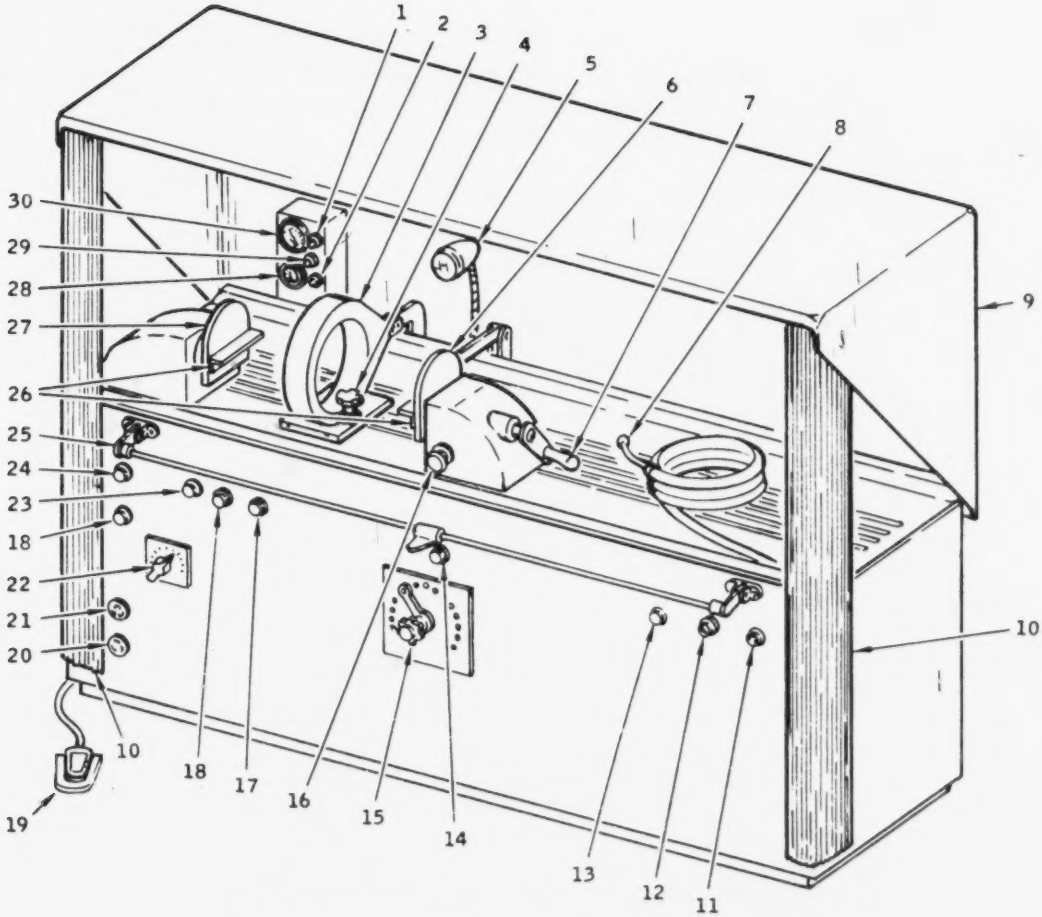

1 DC PILOT LIGHT
2 AC PILOT LIGHT
3 COIL
4 COIL LOCKING HANDLE
5 BLACK LIGHT
6 TAILSTOCK CONTACT PLATE
7 TAILSTOCK CRANK HANDLE
8 NOZZLE
9 HOOD
10 CURTAIN
11 DEMAG CURRENT PILOT LIGHT
12 AC TRANSFER SWITCH
13 MAGNETIZING CURRENT CONTROL (THREE)
14 30 POINT SWITCH START BUTTON
15 CURRENT REGULATING SWITCH
16 TAILSTOCK LOCKING HANDLE
17 DC TRANSFER SWITCH
18 DC AC SELECTOR SWITCH
19 FOOT SWITCH
20 CONTROL CABLE RECEPTACLE
21 110 V AC OUTLET
22 CURRENT CONTROL
23 LINE PILOT LIGHT
24 PUMP SWITCH
25 ACTUATOR
26 HEADSTOCK AND TAILSTOCK LEDGES
27 HEADSTOCK CONTACT PLATE
28 AC AMMETER
29 MAGNETIZING CURRENT PILOT LIGHT
30 DC AMMETER

Figure 3-1. Wet Horizontal Magnetic Particle Test Equipment

Table 3-1. Table of Content for Figure 3-1

INDEX NO.	ITEM	FUNCTION
1	DC PILOT LIGHT	INDICATES D-C OUTPUT CURRENT.
2	AC PILOT LIGHT	INDICATES A-C OUTPUT CURRENT.
3	COIL	LONGITUDINAL MAGNETIZATION OR DEMAGNETIZATION.
4	COIL LOCKING HANDLE	LOCKS COIL POSITION ON RAILS.
5	BLACK LIGHT	
6	TAILSTOCK CONTACT PLATE	CIRCUIT CONNECTION FOR CIRCULAR MAGNETIZATION OR DEMAGNETIZATION, OR CONTACT BLOCK CONNECTOR. ADJUSTABLE TO ACCOMMODATE ARTICLE UP TO 96 INCHES LONG.
7	TAILSTOCK CRANK HANDLE	CONTROLS TAILSTOCK POSITION ON RAILS.
8	NOZZLE	INSPECTION BATH APPLICATION CONTROL.
9	HOOD	INCLOSES INSPECTION BOOTH.
10	CURTAIN	INCLOSES INSPECTION BOOTH.
11	DEMAG CURRENT PILOT LIGHT	INDICATES DEMAGNETIZATION OUTPUT CURRENT.
12	AC TRANSFER SWITCH	SELECTION OF CONTACTS OR COIL CONNECTION OF A-C OUTPUT CURRENT.
13	MAGNETIZING CURRENT CONTROL (THREE)	APPLIES TIMED MAGNETIZING CURRENT.
14	30 POINT SWITCH START BUTTON	STARTS AUTOMATIC DEMAGNETIZATION CYCLE.
15	CURRENT REGULATING SWITCH	DEMAGNETIZATION BY REDUCING A-C OUTPUT IN 30 MOTOR-DRIVEN STEPS. MANUAL SELECTION OF A-C CURRENT OUTPUT FOR MAGNETIZATION.
16	TAILSTOCK LOCKING HANDLE	LOCKS TAILSTOCK POSITION ON RAILS.
17	DC TRANSFER SWITCH	SELECTION OF CONTACTS OR COIL CONNECTION OF D-C OUTPUT CURRENT.
18	DC AC SELECTOR SWITCH	OUTPUT CURRENT SELECTION.
19	FOOT SWITCH	OPERATES SOLENOID AIR VALVE TO CLAMP OR TO RELEASE AIR PRESSURE ACTUATED HEADSTOCK CONTACT PLATE. PRESS AND RELEASE REQUIRED FOR EACH ACTION.
20	CONTROL CABLE RECEPTACLE	CONNECTION FOR EXTERNAL CONTROL SWITCH.
21	110V AC OUTLET	CONVENIENCE OUTLET.
22	CURRENT CONTROL	SELECTION OF D-C AMPERAGE, IN 8 POSITIONS.
23	LINE PILOT LIGHT	SUPPLY VOLTAGE INDICATOR.
24	PUMP SWITCH	CONTROLS INSPECTION BATH PUMP.
25	ACTUATOR	PUSH BAR APPLICATION OF TIMED MAGNETIZING CURRENT, PRESSES ON A MAGNETIZING CURRENT CONTROL.
26	HEADSTOCK AND TAILSTOCK LEDGES	SUPPORT OF MATERIALS.
27	HEADSTOCK CONTACT PLATE	CIRCUIT CONNECTION FOR CIRCULAR MAGNETIZATION OF DEMAGNETIZATION, OR CONTACT BLOCK CONNECTOR. 3 INCH STROKE TO CLAMP MATERIAL FOR GOOD ELECTRICAL CONTACT.
28	AC AMMETER	INDICATES STRENGTH OF A-C OUTPUT CURRENT.
29	MAGNETIZING CURRENT PILOT LIGHT	INDICATES MAGNETIZING CURRENT OUTPUT.
30	DC AMMETER	INDICATES STRENGTH OF D-C OUTPUT CURRENT.

of either a push-button or a hip bar. The hip bar usually extends across the whole front of the equipment and can be made inactive by the turning of a switch. An air-operated contact or foot pedal clamps the specimen securely in place between the stocks. The equipment also incorporates an automatic shot duration timer, usually factory-set for one half second. When using an accessory, a manual shot timer control device bypasses the automatic timer, and an overload relay protects the equipment if the designed duty cycle is manually exceeded. The amperage and duty cycle of the equipment varies with models and manufacturer's types. Maximum ratings of such equipment usually range from approximately 3000 amperes to 6000 amperes. Considerably lower or higher range equipment is available. Most equipment has a thermal circuit breaker which interrupts the operation and, after sufficient cooling time, restores it again. Figure 3-1 with reference Table 3-1 explains the components which make up the wet horizontal equipment.

303 MOBILE EQUIPMENT

In many types of work it is necessary to bring the equipment to a specimen located in another area or in the field. This type of equipment is mobile and sturdy, and is able to conform with various types and methods of required test. Too many times, a wet or dry testing requirement of a specimen is turned down, because the equipment capabilities are unknown to the department or individual test inspector. The following paragraphs deal with mobile equipment and its capabilities.

1. CURRENT AND VOLTAGE SELECTION

In Figure 3-2, a typical mobile piece of magnetic particle equipment is illustrated. This type of equipment operates on 220/440 volt ac and provides both a variable ac and half-wave dc of approximately 3000 amperes. Selection of ac or half-wave dc is easily changed by switching cables on cable lugs located in front of unit. Cables ranging from 15 to 30 feet may be further extended by additional lengths, to as much as 90 to 100 feet. When extension cables are used, decrease in current output is likely and is dependent on the initial output of the equipment. For example, using 25- to 30-foot cables with a maximum current setting of 3000 amperes gives approximately 2600 to 2700 amperes at contact point. With 90- to 100-foot lengths of cable, the current reading at contact point may drop to 600-700 amperes.

2. METHODS USED WITH MOBILE EQUIPMENT

Prods are usually used with mobile equipment; however, a solenoid or the wrapping of a cable into a coil can be used. Also, use of a central conductor hooked up between the two cables facilitates variation in test methods. While the dry magnetic particle powder is frequently used with this type equipment, the wet method can also be employed by the use of an external tank or expendable, one-time materials.

3. OPERATION OF MOBILE EQUIPMENT

The equipment illustrated in Figure 3-2 can be operated on either 220 or 440 volt ac. The power hook-up to the terminals is facilitated and easily accessible through a small door on the side of the equipment (9). Two lights, (8) and (16), located on the front panel, indicate (red) power on, (green) current on; (11), (12) and (13) are cable lugs, with (11) being the ground terminal. Hook-up of cables for ac is accomplished by fastening one cable to lug (11), the other to lug (13). DC output is obtained by fastening cables to lugs (11) and (12). Two ammeters show current values, (4) being the dc output value, and (7) the ac value. The outlets provided are for the cable (10) leading to the microswitch on the prod handle, and for 110-volt ac extension cable (14) to a multiple outlet terminal box, used for emergency lights, electric powder blower, sprayer, etc. Current value is selected by the turning of knob (6) to the desired value. The value increases when the knob is turned clockwise. Demagnetization is performed by first selecting a value slightly higher than the one used to magnetize; then pushing button (5). Demagnetization automatically takes place until the selector handle reaches the lowest value. Identification plate, (2), located at the upper right side of the equipment, contains information as to the type, model, serial number, current input, phase, output, etc. A carrying rack (1) accommodates storage of accessories; cable hook (3)

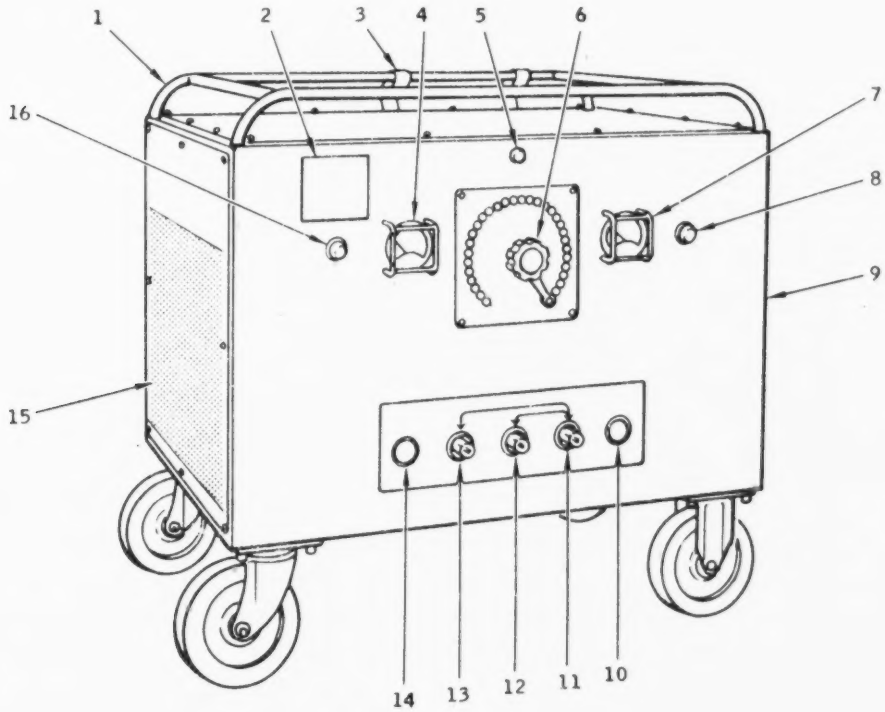

Figure 3-2. Mobile Magnetic Particle Test Equipment

keeps cable handy and neatly coiled when not in use. The equipment is air-cooled and starts blowing as soon as the on/off switch next to the power-in terminal is switched on. Cooling intake (15) requires frequent cleaning to avoid dust and grease buildup. It is important that vent remains uncovered. The cooling fan is always operated between tests to avoid overheating of the components in the equipment.

304 PORTABLE EQUIPMENT

Figure 3-3 shows a typical portable magnetic particle testing unit. Portable equipment, like stationary or mobile equipment, comes in a variety of sizes, shapes, weight, voltage and amperage outputs. Portable equipment definitely has a place in magnetic particle testing; it makes formerly inaccessible areas of testing possible, where older and heavier type equipment prohibited access and use. Basically, portable equipment operates on the same principle as stationary equipment; however, the compactness and ample amperage output, makes it a prime tool for testing a variety of articles. Testing of articles below or above ground level is more easily accomplished since no additional hoisting equipment is required, thus eliminating delays of in-progress work. Portable equipment is usually operated on 110/220 volt ac, and is rated between 500 to 1000 amperes, depending on model and type. Further, it can be either ac, dc, or a combination of ac hwdc type equipment. The main difference

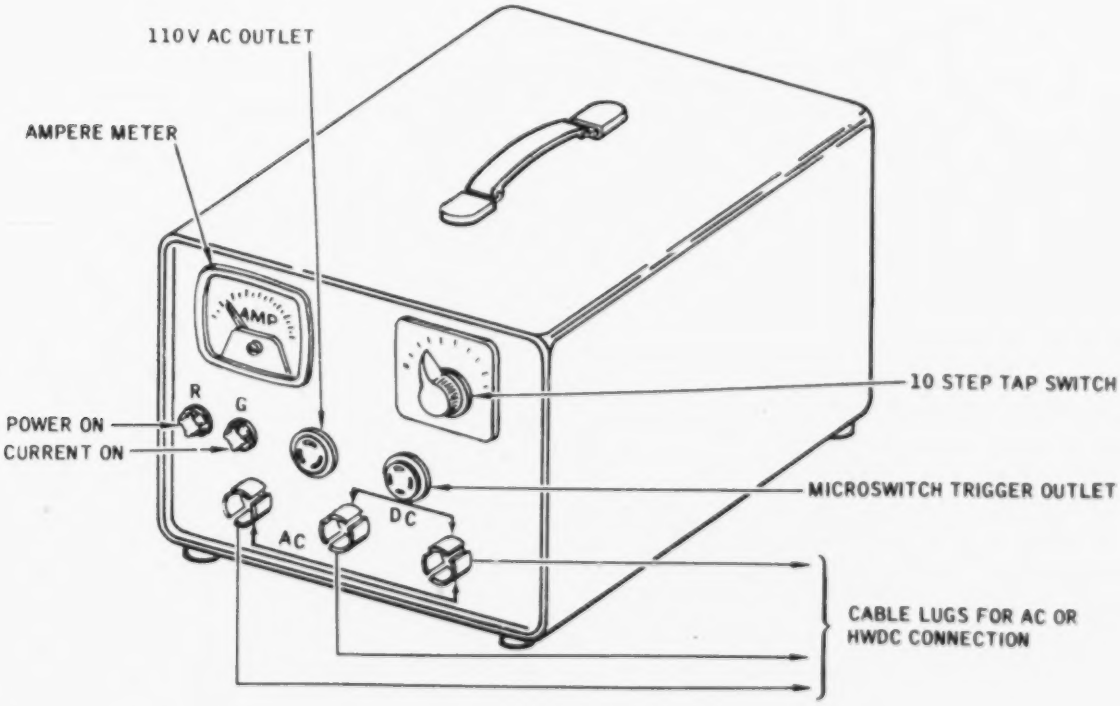

Figure 3-3. Portable Magnetic Particle Test Equipment

between the stationary equipment and the portable unit, besides the lower amperage rating, is the omission of the step-down transformer used for demagnetization. This does not limit the use of the equipment since demagnetization still can be accomplished by other means; for instance, small specimens can be placed in a coil and the current decreased manually, or the number of windings can be reduced one by one.

305 DEMAGNETIZING EQUIPMENT

Most common types of demagnetization equipment consist of an open tunnel-like coil through which ac at the incoming frequency, usually 60 cycles, is passed. The larger type equipment frequently is placed on its own stand, incorporating a track or carriage to facilitate moving large and heavy articles (see Figure 3-4) where (2) is the demagnetization coil, (1) the track, (3) the carriage, (4) timer and switch, and (5) an indicator light. Smaller demagnetization equipment such as table-top units, yokes, or plug-in cable coils, may be feasible for demagnetization of small specimens; however, the large stationary type equipment is preferable when multidimensional specimens are involved.

306 ACCESSORIES

The number of accessories used in magnetic particle testing are extensive. Some are available from the manufacturers of magnetic particle equipment; others are made up for specific purposes. Accessories usually depend on the type and method or application of the test selected. With this in mind, the accessory is chosen primarily to

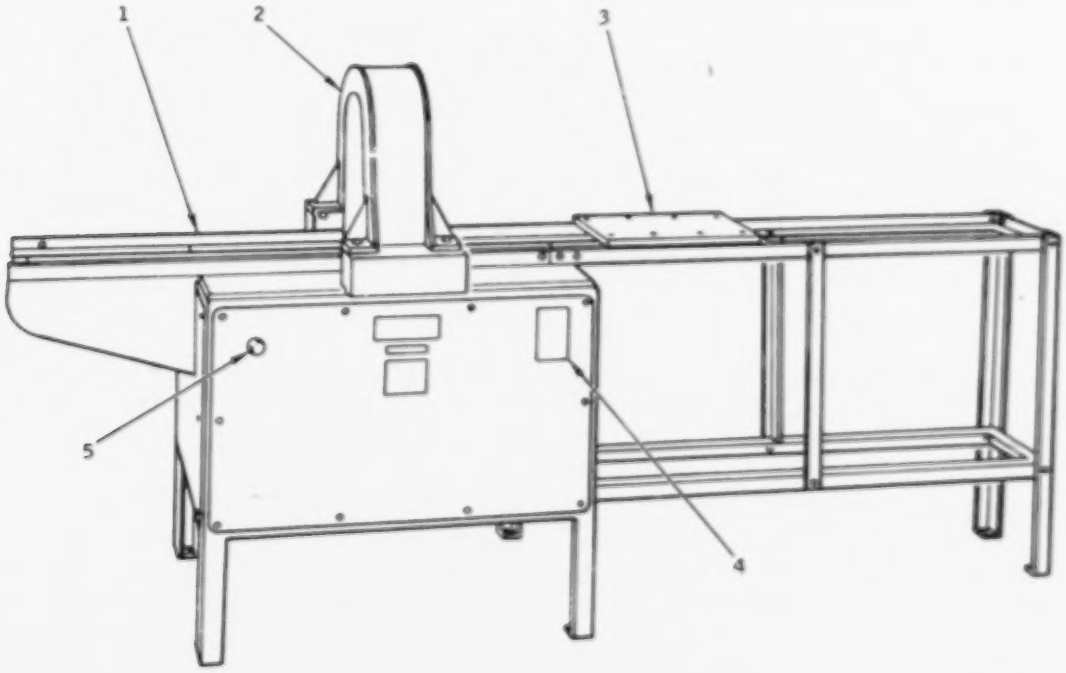

Figure 3-4. Stationary Demagnetization Equipment

facilitate and enhance the quality and performance of the test for which it is designed. An accessory may speed up procedure but, if it in any way impairs the quality of the test, it defeats its purpose. Table 3-2 illustrates some frequently used accessories and their application.

307 BLACK LIGHT

Black light, even though thought of as an accessory, is a standard piece of equipment when used in fluorescent type inspection. In some instances, more than one black light may facilitate the test. A portable type black light may be used with mobile or portable equipment when wet method testing is performed. The equipment usually consists of a current regulating transformer, a mercury arc bulb, and a filter. The transformer is housed separately and the bulb and filter are contained in a reflector lamp unit. For correct test results the lamp should produce an intensity of 125 foot-candles in a three-inch circle, fifteen inches distant from the front surface of the filter. The deep red-purple filter is designed to pass only those wavelengths of light that will activate the fluorescent material. Since dust, dirt, and oil greatly reduce the intensity of the emitted light, the filter must be cleaned frequently. The full intensity of the lamp is not attained until the mercury arc is sufficiently heated. At least five minutes warm-up time is required to reach the required arc temperature. Once turned on, the lamp is usually left on during the entire test or working period because switching on and off shortens the life of the bulb.

Table 3-2. Accessories and Their Use.

CABLES	USED WITH MOBILE OR PORTABLE MAGNETIC PARTICLE EQUIPMENT TO CARRY THE CURRENT TO PROD OR SOLENOID.
CENTRIFUGE	USED IN MEASURING CONCENTRATION AND STRENGTH OF THE LIQUID TESTING MEDIUM.
CLAMPS	USED INSTEAD OF PRODS TO FACILITATE GOOD CONTACT WITH ARTICLE OR WHEN ONE-MAN OPERATION IS REQUIRED.
CONTACT BLOCKS	USED TO FACILITATE CABLE CONNECTION FROM STATIONARY EQUIPMENT FOR EXTERNAL USE OF PRODS OR COILS.
DEMAGNETIZING UNIT	USED TO DEMAGNETIZE FERROUS METALS CONTAINING RESIDUAL MAGNETISM.
FIELD INDICATOR	USED IN MEASURING RESIDUAL MAGNETISM IN AN ARTICLE.
LEACHES	USED AS PRODS OR CLAMPS
LIQUID APPLICATOR	USED IN APPLYING FLUORESCENT OR NONFLUORESCENT TEST MEDIUM: CAN BE EITHER MANUAL, ELECTRIC OR AIR OPERATED.
MESH	USED BETWEEN CONTACT POINTS AND ARTICLE TESTED TO AVOID SPARKING AND BURNS.
POWDER APPLICATOR	USED TO APPLY MAGNETIC PARTICLE POWDER TO THE TEST AREA: CAN BE A POWDER-PUFF, OR POWDER BLOWER, HAND-OPERATED, ELECTRIC OR AIR.
PRODS	USED FOR MAGNETIZING OF WELDS, SHEET OR PLATE.

CHAPTER 4: MEDIUMS AND THEIR PREPARATION
TABLE OF CONTENTS

Paragraph		Page
400	GENERAL	4-3
401	TESTING MEDIUMS	4-3
	1. General	4-3
	2. Magnetic Properties	4-3
	3. Geometric Properties	4-3
	4. Mobility	4-4
	5. Visibility	4-4
	6. Methods of Applications	4-5
	7. Particle Requirements	4-5
402	WET SUSPENSIONS (BATH)	4-5
	1. General	4-5
	2. Agitation	4-6
	3. Settling Test	4-6
	4. Bath Maintenance	4-6
Figure 4-1	Settling Test Procedure	4-7
Table 4-1	Concentration for Wet Suspensions	4-6

CHAPTER 4: MEDIUMS AND THEIR PREPARATION

400 GENERAL

The success of magnetic particle testing is dependent upon selection of material (medium) and the method used to conduct the test. When the medium, whether dry or liquid, is applied to the specimen while the magnetizing current is flowing, the procedure is known as the continuous method. If the medium is applied after the magnetizing current is shut off, the procedure is known as the residual method. The medium comes in either powder or paste form. In the dry method, the powder is applied in its dry form, by sprinkling the specimen. When the wet method is used, the medium, usually a paste, is first mixed with a liquid (kerosene or oil) to make a bath, which is then sprayed or brushed onto the surface of the specimen. No one medium or method is best for detection of all conditions or types of discontinuities.

401 TESTING METHODS

1. GENERAL

Great importance is attached to the knowledge of available detecting mediums and their effect on the indications obtained. Four properties enter into the selection of a satisfactory medium: magnetic, geometric, mobility, and visibility.

2. MAGNETIC PROPERTIES

It is desirable that the particles of the testing medium possess two important properties: high permeability and low retentivity. Permeability is defined as the degree of ease with which a particle is magnetized; retentivity, as that property which enables particles to hold, to a greater or lesser degree, a certain amount of residual magnetism. Particles incorporating high permeability and low retentivity give maximum response in a leakage field, and at the same time do not remain magnetized when they pass out of the influence of the magnetic field.

3. GEOMETRIC PROPERTIES

The sperical shaped particle offers a high degree of mobility but has low attractive power. On the other hand, the long slender jagged particle has a high degree of attractive power and low mobility. A multi-facet nugget type particle is a good compromise in that it reasonably combines the optimum qualities of the other two types. Particle size is an important consideration as it is desirable to have particles of various sizes. Small particles are required to bridge a tight-lipped crack; larger sizes are necessary for wider cracks. Also, a weak leakage field is unable to hold a large particle but is able to fix and retain one of smaller size. Thus dry powder magnetic particles are made up in a wide range of sizes, though all will pass through a 100-mesh screen.

a. In the wet method, magnetic oxides of iron are employed. While extremely fine in size, they are of lower permeability than the metallic dry particles, having neither the most desirable shape nor variety of size; the advantages of applying these particles in the form of a suspension are numerous. When used, other factors need to be considered; particularly, the ability to maintain a suspension.

b. Magnetic particles, unless extremely fine, cannot be maintained in suspension without sacrificing mobility. Fine magnetic oxides are used because they can be suspended in a liquid, when a dispersing agent is employed.

4. MOBILITY

When the particles are brought into the influence of the leakage field of a discontinuity, they are free to form a pattern or indication. This freedom is influenced by condition, shape, and application of the particles.

a. In the dry method, mobility is obtained by dusting or blowing the particles over the surface of the article. This permits the leakage field at the discontinuity to catch and hold some particles as they move by. Mobility is also obtained by vibrating the article after the particles have been dusted on. This is why ac is used advantageously, since the influence of the alternating field causes the particles to "dance" and thus provides mobility.

b. The principal advantage of the wet method is the excellent mobility (freedom to move in the three dimensions) of the suspended particles. It is important to use a low viscosity liquid so that the suspended particles are retarded as little as possible by the liquid in which they are suspended. The most nearly ideal condition from the point of mobility, is a cloud of particles floated with very low velocity up to the surface being tested. This condition is obtained only with special equipment.

5. VISIBILITY

An indication must be readily visible. A good light source is essential. With various types of surfaces, from highly polished articles to rough castings, no one color is always satisfactory. The choice of color is entirely dependent on visibility. The most widely used particles are grey, red and black colored. The grey powder has excellent contrast against practically all surfaces, with exception of certain silver-gray sandblasted surfaces. Recent developments are the fluorescent powders and pastes, particles coated with a dye which fluoresce brilliantly under an ultraviolet or black light, thereby increasing visibility.

6. METHODS OF APPLICATION

Dry magnetic particles are commonly applied from shaker cans or bulbs. This is the simplest but not necessarily the best method. Automatic particle blowing equipment is usually economical in its use of particles and in most instances the most satisfactory way of floating the dry particles to the test surface with minimum velocity. Wet suspensions are caused to flow over the surface to be examined or the article is immersed in a bath of the suspension. Flow application is usually used with continuous magnetic particle testing and the immersion bath with residual testing.

7. PARTICLE REQUIREMENTS

To properly function the particles composing the medium in both the wet and dry method must:

a. Be non-toxic.

b. Be finely divided.

c. Be ferromagnetic.

d. Be free of contaminants.

e. Possess high permeability.

f. Possess low retentivity.

g. Possess high color contrast (visibility).

h. Be within correct size range.

402 WET SUSPENSIONS (BATH)

1. GENERAL

The bath used with the wet method of magnetic particle testing consists of a liquid vehicle in which the particles are suspended. The liquid vehicles used are usually kerosene, or a similar light oil. Water, suitably treated with anti-corrosion, anti-foam, or wetting agents, may also be used. The vehicle must be nonfluorescent and, for safety purposes, non-toxic and non-volatile, with a low flashpoint. The particles used are obtainable in a paste form or in a highly concentrated liquid form and may be either fluorescent or nonfluorescent. To achieve the required test sensitivity, the degree of particle concentration in the bath must be correct. Too light a concentration leads to very light indications of discontinuities; too heavy a concentration results in too much over-all surface coverage, which may mask or cause incorrect interpretation of discontinuity indications. Table 4-1 lists the particle concentration for wet suspensions.

Table 4-1. Concentration for Wet Suspensions

TYPE PARTICLES	OZ. PARTICLES/GAL SUSPENSION	ML OR CC PARTICLES/ 100 ML OR 100 CC
NONFLUORESCENT	1.0 - 1.4	1.7 - 2.4
FLUORESCENT	0.1 - 0.4	0.2 - 0.5

2. AGITATION

While the bath is in use, it must be constantly agitated to maintain the particles in suspension. A short period of agitation prior to use is desirable. Agitation is usually accomplished by electrically driven pumps or by compressed air. Compressed air agitation while effective is the less desirable since moisture and foreign matter carried by the air may contaminate the bath and shorten its useful life. The bath should be checked daily due to evaporation of the vehicle and loss of the particles as they are removed from the bath on the articles under test.

3. SETTLING TEST

After the bath is thoroughly mixed and agitated, it is essential to check its strength. This is accomplished by gravity settling in a graduated pear-shaped centrifuge tube, as shown in Figure 4-1. The suspension is agitated for several minutes to assure an even distribution of the particles in the vehicle. Then, 100 cc of the bath is pumped through the hose nozzle into the centrifuge and allowed to settle for thirty minutes. The amount of paste particles (measured in cc) settling in the bottom of the centrifuge indicates the percentage of solid matter (particles) in the bath. In measuring the solid matter in the centrifuge, foreign material such as lint and dirt, which settles on top of the paste material is not considered. If the particle reading is high, distillate (vehicle) is added, if low paste or liquid concentrate containing particles is added.

4. BATH MAINTENANCE

The strength of the bath is maintained by adding paste or oil as indicated by results of the settling test. In adding paste, a thin "slurry" is first made. This is identical to the procedure for the initial preparation of the bath. Paste is never directly added to the bath because it does not properly disperse. In use, eventually the bath becomes contaminated by dirt, lint, and chips to a degree that efficient formation of discontinuity indications is hindered. Degree of contamination is determined by the amount of foreign matter settling with the paste in the bottom of the centrifuge tube during the settling test. When the bath is contaminated beyond usefulness it is discarded, the bath tank is thoroughly cleaned and a new bath is mixed. Contamination can be minimized by keeping the bath covered when not in use.

1 AGITATE THE SUSPENSION THOROUGHLY TO ASSURE PARTICLE DISTRIBUTION.

2 FILL 100 CC (100 ML) SAMPLE FROM THE DELIVERY HOSE INTO A 100 CC (100 ML) GRADUATED CENTRIFUGE TUBE OR GRADUATE.

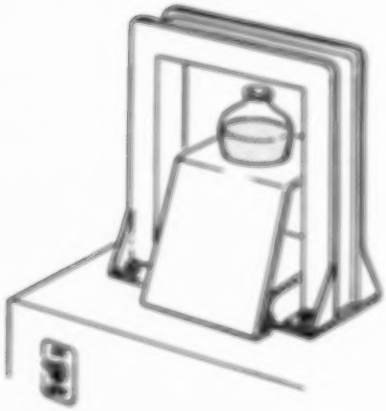

3 DEMAGNETIZE, IF NECESSARY (WHEN CLUMPING OCCURS).

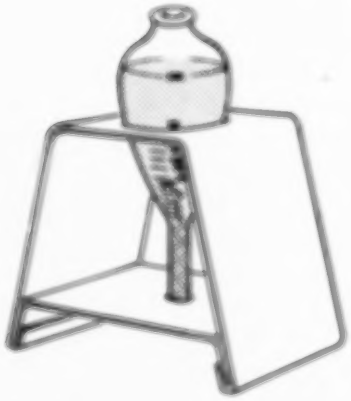

4 ALLOW TO SETTLE FOR 30 MINUTES.

5 TAKE READING AND RECORD IN THE LOG.

6 ADJUST EITHER BY ADDING PARTICLES OR VEHICLES, IF NECESSARY.

Figure 4-1. Settling Test Procedures

CHAPTER 5: MAGNETIC PARTICLE APPLICATION
TABLE OF CONTENTS

Paragraph		Page
500	GENERAL	5-3
501	CLASSIFICATION OF MAGNETIZING METHODS	5-3
502	RESIDUAL METHOD	5-3
503	CONTINUOUS METHOD	5-3
504	CIRCULAR MAGNETIZATION PROCEDURES	5-3
505	LONGITUDINAL MAGNETIZATION PROCEDURES	5-5
506	DIRECT CURRENT	5-5
507	ALTERNATING CURRENT	5-7
508	TESTING MEDIUM	5-7
	1. General	5-7
	2. Dry Powder	5-7
	3. Liquid Paste Medium (Nonfluorescent)	5-7
	4. Liquid Paste (Fluorescent)	5-12
	5. Bath Strength	5-12
509	SURFACE PREPARATION	5-13
510	LOCATION OF DISCONTINUITIES	5-13
511	DEMAGNETIZATION REQUIREMENTS	5-14
512	FINAL CLEANING	5-14

Figure 5-1	Magnetization of Solid Cylindrical Specimen	5-4
Figure 5-2	Magnetization of Cylindrical Specimen w-Var: Diameter	5-5
Figure 5-3	Magnetization of Large Diameter Discs, Gears, etc.	5-6
Figure 5-4	Magnetization of Very Short Hollow Cylinders	5-7
Figure 5-5	Magnetization of Hollow Cylindrical Specimens	5-8
Figure 5-6	Magnetization of Irregularly Shaped Specimens	5-9
Figure 5-7	Magnetization of Solid Article With Hole Through End	5-10
Figure 5-8	Magnetization of Springs	5-11
Figure 5-9	Magnetization of Heavy Plate Welds	5-12
Figure 5-10	Magnetization With Use of Cables	5-13
Figure 5-11	Flux Density Curve	5-14

CHAPTER 5: MAGNETIC PARTICLE APPLICATION

500 GENERAL

The importance of proper magnetizing applications, covered in this chapter, is focused on recommended procedures for magnetic particle testing of typical NASA articles. The wide range of NASA articles makes complete coverage impossible in this handbook; however, methods and techniques shown in Figures 5-1 through 5-10 can be readily adapted to most ferromagnetic articles. The comments shown adjacent to each illustration facilitate acknowledgement of the recommended procedures. A short coverage and recap of previously discussed or related matters is given in the following paragraphs.

501 CLASSIFICATION OF MAGNETIZING METHODS

Several different bases are used for classifying magnetizing methods. The first, based on whether or not the magnetizing force is maintained during application of the medium, includes the residual method and the continuous method. The second is based on the character of the field utilized for the magnetic operation and includes the circular and longitudinal methods. The third is based on the type of magnetizing current used; ac, dc, or hwdc.

502 RESIDUAL METHOD

In the residual method, the medium is applied after the specimen has been magnetized and the magnetizing force removed. This method, which relies entirely on the amount of residual magnetism retained in the specimen, is not used on specimens made from low alloy steel, which have low retentivity. The residual method is used when higher sensitivity serves no useful purpose.

503 CONTINUOUS METHOD

In this method, the magnetizing operation is conducted simultaneously with the application of the medium, i.e., the medium is in contact with the specimen while current is being applied. The procedure is best accomplished by giving three shots of current, the last after the hose or whatever applicator used is removed, thus avoiding the possibility of indications being washed away by the heavy flow. Figure 5-11 illustrates a flux density curve for continuous and residual methods.

504 CIRCULAR MAGNETIZATION PROCEDURES

Where it is necessary to pass current through the specimen, care is exercised to prevent arcing or overheating at the contact areas. All contact areas are clean, and specimens are mounted horizontally between the contact plates. Suitable head pressure is exerted to insure uniform magnetization. Large and heavy specimens are mounted in suitable fixtures to insure proper orientation. Where it is necessary to

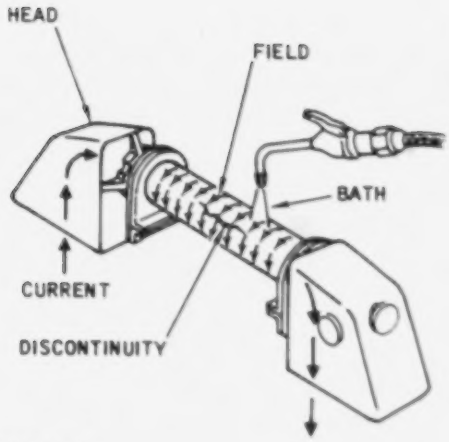

HEAD SHOT

CIRCULAR MAGNETIZATION LOCATES DISCONTINUITIES OCCURRING 45°-90°, TO THE DIRECTION OF THE FIELD.

INSPECT FOR PARTICLE INDICATIONS SHOWING LONGITUDINAL DISCONTINUITIES - MARK DISCONTINUITIES.

SOLID CYLINDRICAL ARTICLES		
EXAMPLE	APPROXIMATE CURRENT	
	HEAD SHOT AMPERES	COIL SHOT AMPERES
1.0" DIA. ROD	500-1000	300-700
3.0" DIA. ROD	1500-3000	1000-MAX.
1.5" DIA. BOLT	200-500	100-300
CONTROL YOUR AMPERAGE ACCORDING TO APPLICABLE SPECIFICATIONS.		

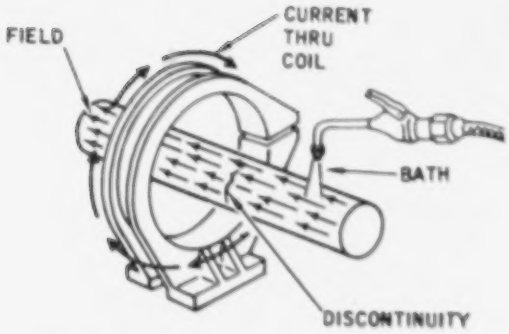

COIL SHOT

LONGITUDINAL MAGNETIZATION LOCATES TRANSVERSE DISCONTINUITIES.

INSPECT FOR PARTICLE INDICATIONS SHOWING TRANSVERSE DISCONTINUITIES.

NOTE

EFFECTIVE LENGTH MAGNETIZED BY COIL SHOT IS A FEW INCHES EITHER SIDE OF COIL. MAXIMUM LENGTH OF ARTICLE COVERED BY ONE SHOT IS 18 INCHES. ON LONG ARTICLES, USE REPEATED SHOTS AND BATHS DOWN THE LENGTH OF ARTICLE. PUT SMALL ARTICLES CLOSE TO COIL BODY.

Figure 5-1. Magnetization of Solid Cylindrical Specimen

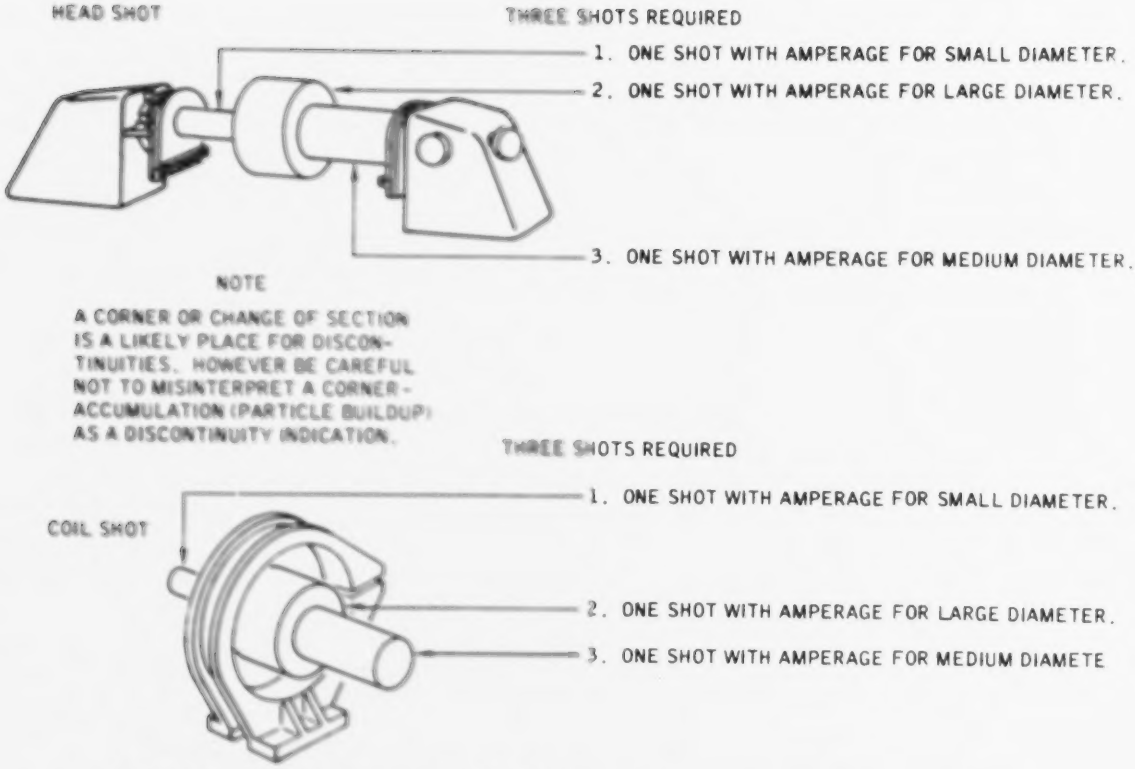

Figure 5-2. Magnetization of Cylindrical Specimen w-Var: Diameter

pass current through large cylindrically shaped specimens contact balls are recommended. When protective coatings interfere with flow of current, they are removed at the area of contact. A central conductor is normally used in all cases where testing of internal surfaces of enclosed or cylindrically shaped specimens of small diameter is required. A central conductor is also used for circular magnetization of other shapes, when applicable. The diameter of the conductor is as near the size of the specimen openings as practicable and when multiple specimens are tested they are spread to avoid contact.

505 LONGITUDINAL MAGNETIZATION PROCEDURES

When a solenoid is used to magnetize the specimen, the solenoid is to be no larger than necessary to accommodate the specimen, and the specimen is oriented within the solenoid to insure adequate field strength.

506 DIRECT CURRENT

To obtain indications of subsurface discontinuities, direct current or half-wave rectified current (pulsating dc) is used.

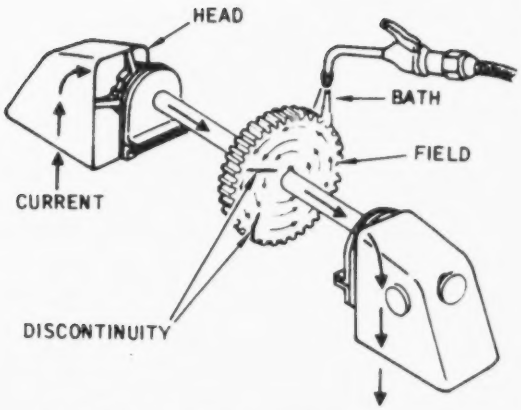

LARGE DIAMETER DISCS, GEARS, ETC.		
EXAMPLE	APPROXIMATE CURRENT	
	SHOT NO. 1 AMPERES	SHOT NOS. 2 & 3 AMPERES
MEDIUM DIA. GEARS—4" D. 8" D.	2000-MAX.	1500-MAX.
REDUCTION GEAR—15" D.	2000-MAX. (NOTE "A")	1000-MAX.
CAM RING & GEAR	2000-MAX. (SEE NOTE)	1000-2500
CONTROL YOUR AMPERAGE BY APPLICABLE SPECIFICATIONS.		

SHOT NO. 1 — HEAD SHOT (WITH CENTRAL CONDUCTOR)

CENTRAL CONDUCTOR IS USED FOR CIRCULAR MAGNETIZATION TO LOCATE DISCONTINUITIES ACROSS GEAR.

INSPECT FOR PARTICLE INDICATIONS SHOWING DISCONTINUITIES - MARK ALL INDICATIONS.

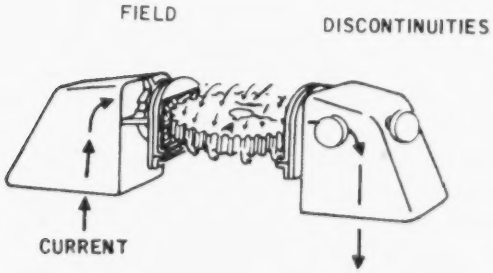

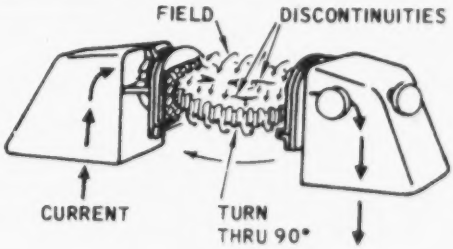

SHOT NO. 2 — FIRST HEAD SHOT ACROSS GEAR

CURRENT PASSING ACROSS DIAMETER THROUGH GEAR LOCATES DISCONTINUITIES EXTENDING AROUND THE GEAR.

USE COPPER-BRAID, NEOPRENE-BACKED CONTACTS ON HEADS TO AVOID BURNING GEAR TEETH AT CONTACT POINTS.

INSPECT FOR PARTICLE INDICATIONS SHOWING DISCONTINUITIES - MARK ALL DISCONTINUITIES.

SHOT NO. 3 — SECOND HEAD SHOT ACROSS GEAR

TURN THE GEAR 90° AND SHOOT AGAIN ACROSS DIAMETER.

INSPECT FOR PARTICLE INDICATIONS SHOWING DISCONTINUITIES - MARK ALL DISCONTINUITIES.

TURNING THE GEAR 90° AND SHOOTING ACROSS IT TWICE WILL REVEAL ALL DISCONTINUITIES EXTENDING AROUND GEAR.

NOTE: LARGE DIAMETER RINGS WITH LARGE CENTER HOLE. REST ON CONDUCTOR, INSPECT ONLY NEAR CONDUCTOR. REPEAT AROUND CIRCUMFERENCE.

Figure 5-3. Magnetization of Large Diameter Discs, Gears, etc.

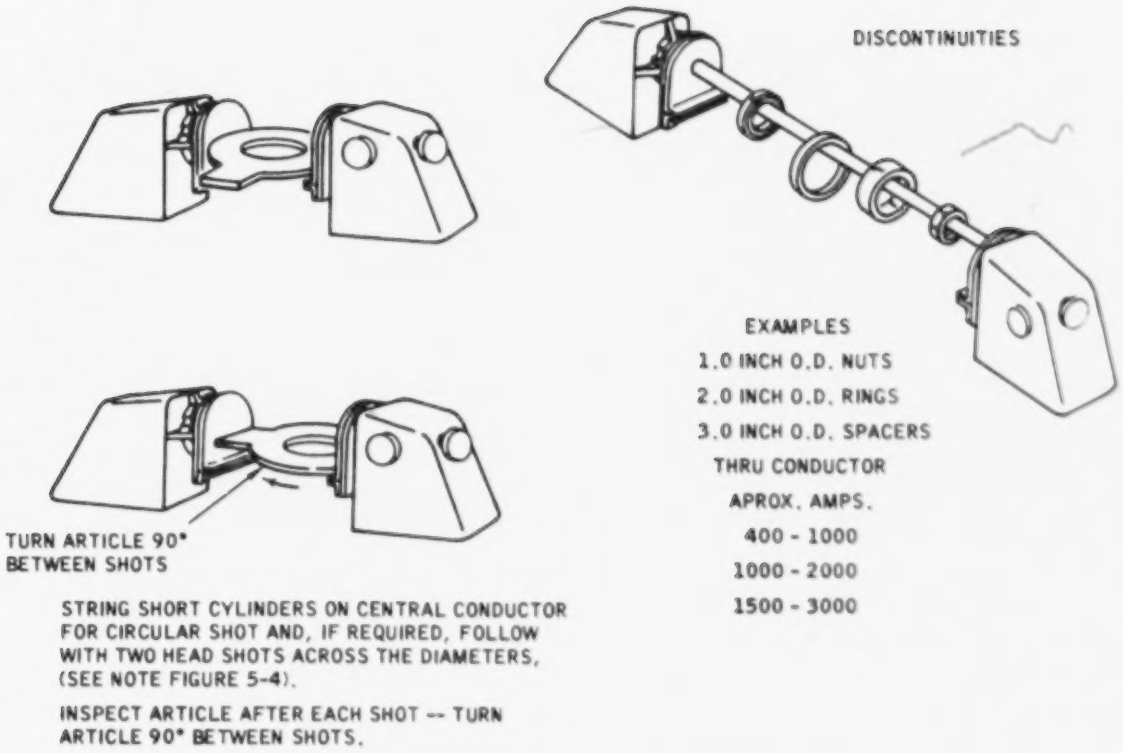

Figure 5-4. Magnetization of Very Short Hollow Cylinders

507 ALTERNATING CURRENT

Alternating current is used for detecting surface discontinuities only.

508 TESTING MEDIUM

1. GENERAL

The testing medium employed in magnetic particle testing shall be dry powder, with various colors for contrast; liquid paste, black or red for contrast; or fluorescent liquid paste for use with black light.

2. DRY POWDER

Dry powder is normally used for testing of weldments where the prod method is employed. The powder is sprinkled on the surface of the article while the magnetizing current is flowing between the prods.

3. LIQUID PASTE MEDIUM (NONFLUORESCENT)

Liquid paste (nonfluorescent) is used for both the wet residual and wet continuous methods. It is applied either by spraying, brushing, or submersing the article in the

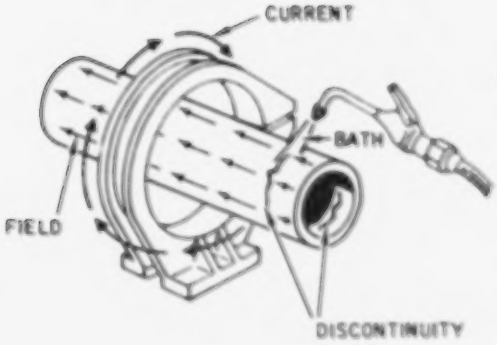

HOLLOW CYLINDRICAL ARTICLES		
EXAMPLE	APPROXIMATE CURRENT	
	HEAD SHOT AMPERES	COIL SHOT AMPERES
1" O.D. TUBE	500-1000	300-700
3" O.D. TUBE	1500-3000	1000-MAX.
WRIST PIN (1-1/2" D.)	800-1500	400-800
CYLINDER SLEEVE 6"	2500-MAX.	1000-MAX.
CONTROL YOUR AMPERAGE ACCORDING TO APPLICABLE SPECIFICATIONS.		

COIL SHOT

LONGITUDINAL MAGNETIZATION FINDS TRANSVERSE DISCONTINUITIES.

APPLY BATH, BOTH INSIDE AND OUTSIDE.

INSPECT FOR PARTICLE INDICATIONS SHOWING TRANSVERSE DISCONTINUITIES - INSIDE AND OUTSIDE - MARK DISCONTINUITIES.

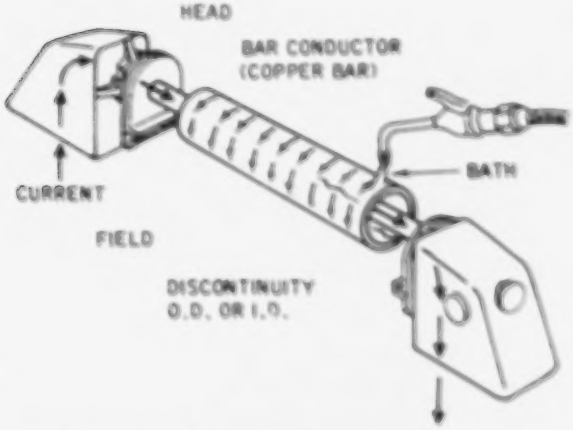

NOTE

CENTRAL CONDUCTOR GIVES THE BEST MAGNETIC FIELD, AND BEST INDICATIONS, ON INNER SURFACES OF ANY CYLINDRICAL SHAPED ARTICLE.

HEAD SHOT (WITH CENTRAL CONDUCTOR)

CENTRAL CONDUCTOR IS USED FOR CIRCULAR MAGNETIZATION TO LOCATE LONGITUDINAL DISCONTINUITIES.

APPLY BATH, BOTH INSIDE AND OUTSIDE.

INSPECT FOR PARTICLE INDICATIONS SHOWING LONGITUDINAL DISCONTINUITIES - INSIDE AND OUTSIDE - MARK DISCONTINUITIES.

Figure 5-5. Magnetization of Hollow Cylindrical Specimens

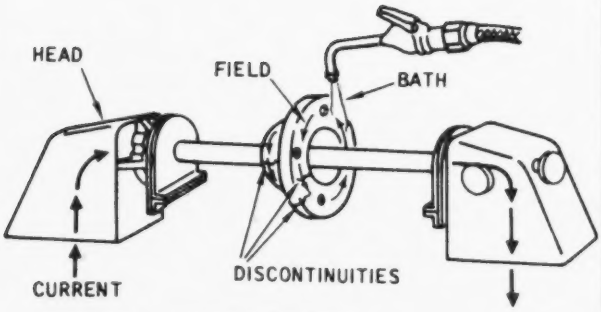

SHOT NO. 1 – HEAD SHOT (WITH CENTRAL CONDUCTOR)

CENTRAL CONDUCTOR, INSERTED THROUGH HOLES IN HOUSING, IS USED FOR CIRCULAR MAGNETIZATION TO LOCATE DISCONTINUITIES IN THE DIRECTION SHOWN.

CONDUCTOR KEPT NEAR BODY OF ARTICLE (SEE NOTE FIGURE 5-4).

INSPECT FOR PARTICLE INDICATIONS SHOWING DISCONTINUITIES.

IRREGULARLY SHAPED ARTICLE			
EXAMPLE HOUSINGS	APPROXIMATE CURRENT		
	SHOT NO. 1 AMPERES	SHOT NOS. 2 & 3 AMPERES	SHOT NO. 4 AMPERES
4" DIA. 6" DIA. 8" DIA. 12" DIA.	2000-MAX. 2000-MAX. 2000-MAX. 2000-MAX. (SEE NOTE FIG. 5-4)	800-MAX. INCREASING WITH SIZE AND THICKNESS	500 TO MAX.
CONTROL YOUR AMPERAGE ACCORDING TO APPLICABLE SPECIFICATION.			

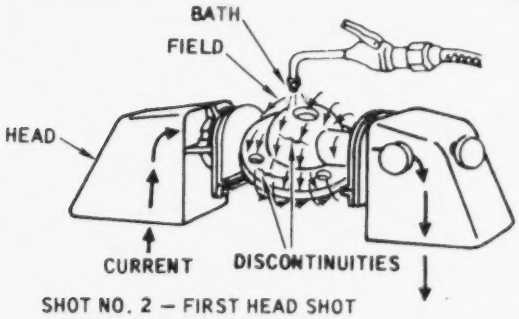

SHOT NO. 2 – FIRST HEAD SHOT ACROSS A DIAMETER

MAGNETIZES ARTICLE CIRCULARLY AS SHOWN.

CURRENT PASSING ACROSS DIAMETER THROUGH ARTICLE LOCATES DISCONTINUITIES IN DIRECTION SHOWN WHEN BATH IS APPLIED.

INSPECT FOR PARTICLE INDICATIONS SHOWING DISCONTINUITIES.

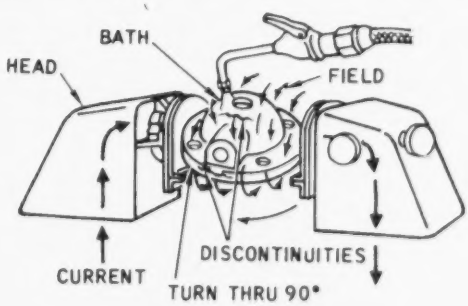

SHOT NO. 3 – SECOND HEAD SHOT ACROSS A DIAMETER

SAME AS SHOT NO. 2, EXCEPT ROTATE ARTICLE 90°: SHOOT ACROSS A SECOND DIAMETER AND APPLY BATH, TO LOCATE ALL DISCONTINUITIES AS SHOWN.

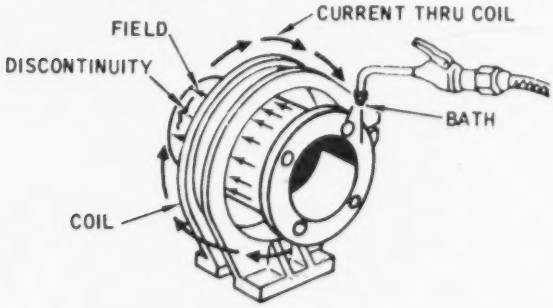

SHOT NO. 4 – COIL SHOT

PROVIDES LONGITUDINAL MAGNETIZATION FOR ARTICLES WITH LONG DIMENSION.

THIS SHOT IS USED WHEN SHAPE OF HOUSING APPROACHES THAT OF A CYLINDER.

Figure 5-6. Magnetization of Irregularly Shaped Specimens

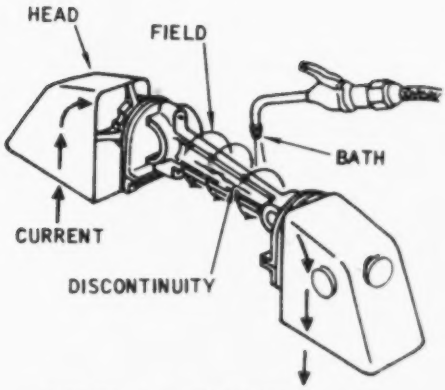

SHOT NO. 1 — HEAD SHOT

CIRCULAR MAGNETIZATION LOCATES LONGITUDINAL DISCONTINUITIES.

CURRENT PASSED THROUGH ARTICLE MAGNETIZES IT CIRCULARLY TO FIND LONGITUDINAL DISCONTINUITIES - APPLY BATH.

INSPECT FOR PARTICLE INDICATIONS - MARK DISCONTINUITIES.

SOLID ARTICLES WITH HOLE THROUGH END			
EXAMPLE	APPROXIMATE CURRENT		
CONNECTING RODS	SHOT NO. 1 AMPERES	SHOT NO. 2 AMPERES	SHOT NO 3 (CENTRAL CONDUCTOR) AMPERES
1" MAX. WEB. O.D.	800-1000	300-700	800-1500
3" CROSS-SECTION	2000-3000	1000-MAX.	2500-MAX.
ROCKER ARMS	500-2500	300-700	500-2000
WIND HINGES	2000-MAX.	1000-MAX.	1500-2500
TERMINAL FITTINGS	200-800	100-500	500-1500
CONTROL YOUR AMPERAGE BY APPLICABLE SPECIFICATIONS.			

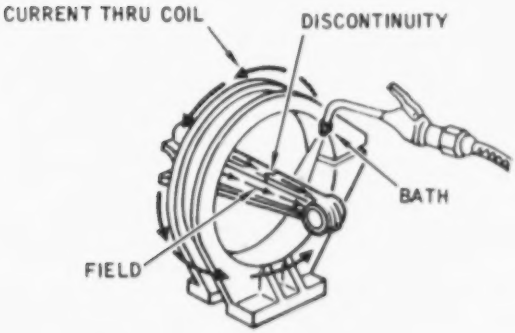

SHOT NO. 2 — COIL SHOT

LONGITUDINAL MAGNETIZATION LOCATES TRANSVERSE DISCONTINUITIES.

CURRENT PASSED THROUGH COIL MAGNETIZES LONGITUDINAL.

INSPECT FOR PARTICLE INDICATIONS WHICH SHOW TRANSVERSE DISCONTINUITIES - MARK DISCONTINUITIES.

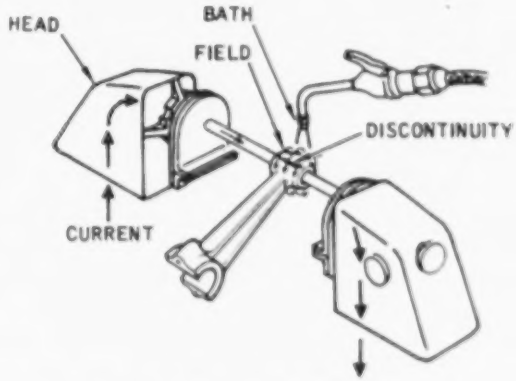

SHOT NO. 3 — HEAD SHOT (WITH CENTRAL CONDUCTOR)

USED TO DETECT DISCONTINUITIES AROUND HOLE.

INSERT CENTRAL CONDUCTOR BAR THROUGH HOLE.

MAGNETIZE WITH CURRENT SHOT, APPLY BATH INSIDE AND OUT.

INSPECT FOR PARTICLE INDICATIONS WHICH SHOW DISCONTINUITIES PARALLEL TO DIRECTION OF HOLE - INSIDE AND OUT - MARK DISCONTINUITIES.

Figure 5-7. Magnetization of Solid Article With Hole Through End

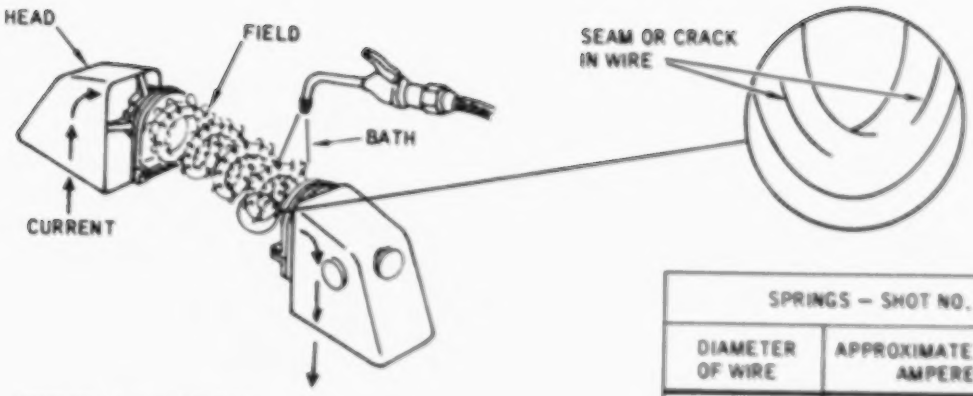

SHOT NO. 1 — HEAD SHOT

CURRENT PASSED THROUGH SPRING FROM END TO END LOCATES LOGITUDINAL DISCONTINUITIES IN THE WIRE THAT FORMS THE SPRING.

APPLY BATH.

INSPECT FOR PARTICLE INDICATIONS WHICH SHOW THE LONGITUDINAL DISCONTINUITIES - MARK DISCONTINUITIES.

SPRINGS — SHOT NO. 1	
DIAMETER OF WIRE	APPROXIMATE CURRENT AMPERES
1/4"	100-250
1/2"	200-500
1"	500-1000
CONTROL YOUR AMPERAGE ACCORDING TO APPLICABLE SPECIFICATIONS.	

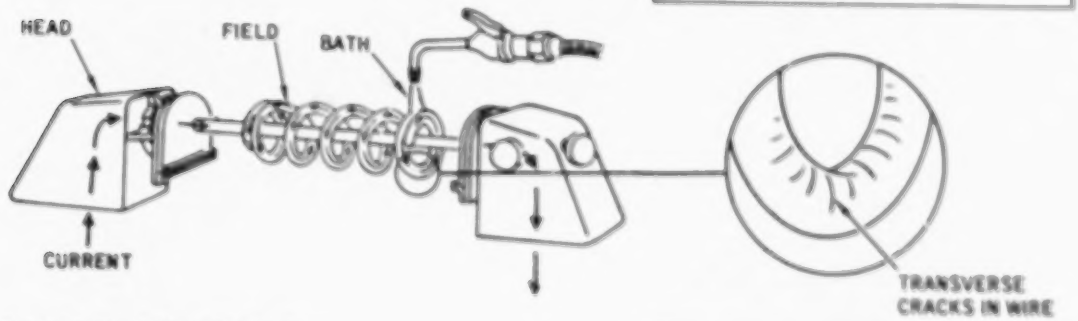

SHOT NO. 2 — HEAD SHOT (WITH CENTRAL CONDUCTOR)

CURRENT PASSED THROUGH A CENTRAL CONDUCTOR MAGNETIZES SPRING AND LOCATES TRANSVERSE DISCONTINUITIES IN THE WIRE THAT FORMS THE SPRING.

APPLY BATH.

INSPECT FOR PARTICLE INDICATIONS WHICH SHOW TRANSVERSE DISCONTINUITIES - MARK DISCONTINUITIES.

SPRINGS — SHOT NO. 2	
DIAMETER OF SPRING COIL	APPROXIMATE CURRENT AMPERES
1"	500-1000
2"	1000-2000
3"	1500-3000

NOTE: SPRINGS ARE USUALLY INSPECTED BY THE CONTINUOUS METHOD AND USING FLUORESCENT TYPE MEDIUM AND BLACK LIGHT.

Figure 5-8. Magnetization of Springs

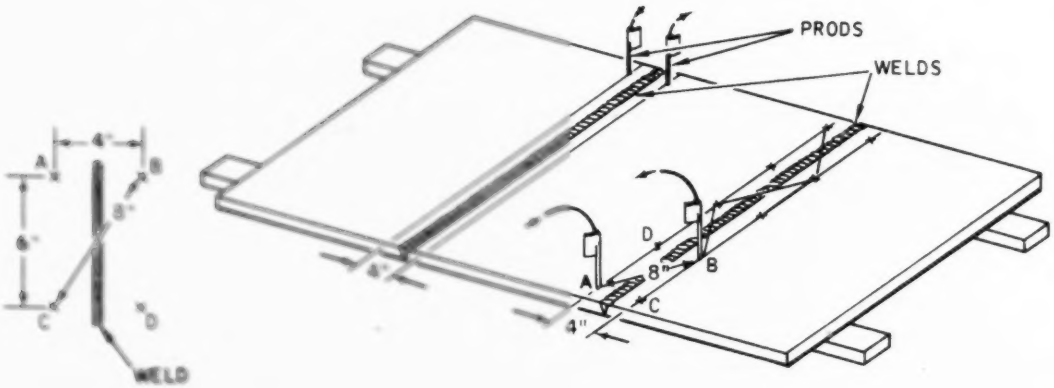

FOR 100% EFFICIENT COVERAGE PRODS MUST BE CRISS-CROSSED AND AMPERAGE SELECTED FOR EACH CHANGE IN PROD TO PROD DISTANCE. BEST RESULTS ARE OBTAINED WITH 100-125 AMPERES PER LINEAR INCH PROD SPACING.

PROD SPACING A-B & C-D = 4" (4-500 AMP)
PROD SPACING A-C & B-D = 6" (6-750 AMP)
PROD SPACING B-C & A-D = 8" (8-1000 AMP)

WHERE WELDING REQUIRES MAGNETIC PARTICLE TESTING OF EACH LAYER OR ROOT PASS AND EACH THIRD PASS FOLLOWING, CARE MUST BE EXERCISED TO PLACE THE PRODS CORRECTLY TO OBTAIN THE RIGHT FIELDS AND TO AVOID SPARKS AND BURNS WHICH MAY RESULT IN CRACKING OF WELD MATERIAL.

Figure 5-9. Magnetization of Heavy Plate Welds

suspension. Contrast colors of particles are black for light machined surfaces and red for articles which have been heat discolored or have received black oxide surface treatment.

4. LIQUID PASTE (FLUORESCENT)

Liquid paste (fluorescent) is used with both the wet residual and wet continuous methods, and is applied to the specimen by spraying, brushing or immersion of the specimen into the bath. The particles are coated with a fluorescent dye which, when inspected under a black light, fluoresce brilliantly. Liquid paste (fluorescent) is used on both dark- or light-colored surfaces.

5. BATH STRENGTH

When required the strength of the bath used with wet magnetic particle testing is checked by the settling test described in paragraph 402.3. The frequency of the test is determined by the degree of bath usage but it must be accomplished at least once daily, usually at the commencement of the working day.

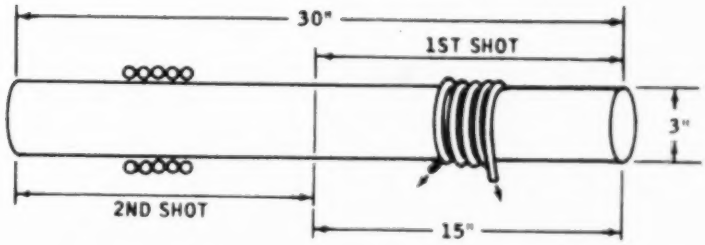

THE SAMPLE ARTICLE SHOWN ABOVE BEING A SOLID ROUND MACHINED PIVOT-PIN OF 3 INCHES IN DIAMETER AND 30 INCHES LONG, WILL REQUIRE 2 SHOTS. SINCE THE EFFECTIVE FIELD ONLY EXTENDS A FEW INCHES OUTSIDE THE COIL A PRACTICAL AREA COVERAGE AT ANY ONE TIME SHOULD NOT EXCEED 15-18 INCHES. APPLYING THE FORMULA DISCUSSED PREVIOUSLY IN THIS HANDBOOK ($\frac{45,000}{L/D}$) AND DIVIDING THIS BY THE NUMBER OF CABLE WRAPS, WILL RESULT IN THE REQUIRED AMPERAGE TO BE USED. USING 5 TURNS THE AMPERAGE FOR THE ARTICLE SHOWN WILL BE 1800 AMPERES, WHERE:

L = 30 : 2 = 15
D = 3
L/D = 5
45,000 : 5 = 9000
9000 : 5 (TURN CABLE) = 1800 AMP

FOR A SIMILAR ARTICLE OF 2" DIAMETER X 24" LONG, THE REQUIRED AMPERAGE WITH USE OF 4 TURNS = 1875 AMPERES. WITH 5 TURNS ONLY 1500 AMPERES WILL BE REQUIRED.

Figure 5-10. Magnetization with Use of Cables

509 SURFACE PREPARATION

Prior to magnetic particle testing, the specimen is thoroughly cleaned. Cleaning may involve removal of flake, slag, heavy build-up of paint, rust, grease, or other organic materials, which interfere with the final test result. Sandblasting equipment, wire brushes, files, chipping hammers, etc., are suitable for removal of interfering substances. Approved chemical cleaning methods are also acceptable. The smoother the surface and the more uniform its color, the more favorable are the conditions for formation and examination of the particle pattern. When it is necessary to perform magnetic particle testing on specimens that have been covered with anti-corrosive protective coatings such as primers, paints, or cadium-, chromium-, nickel- or zinc-plating, the coatings do not necessarily have to be removed, since discontinuity indications are not usually affected. The acceptable thickness limit of such coatings is up to and including 0.001 inch. In certain cases, coatings are purposely applied to the specimen to provide a contrasting background for the medium (powder patterns).

510 LOCATION OF DISCONTINUITIES

Discontinuities are located either on or below the surface of the specimen. Discontinuities located on the surface appear as sharp distinct lines, whereas discontinuities

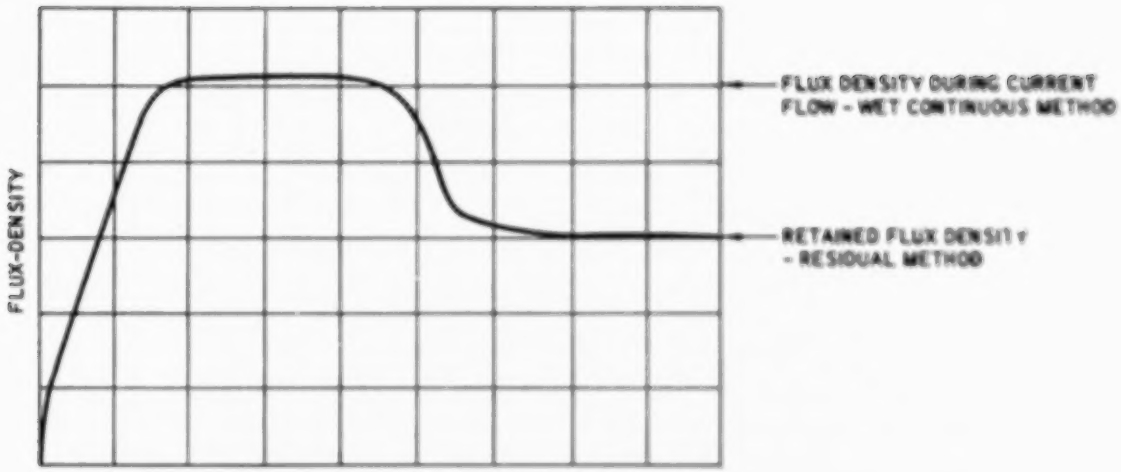

Figure 5-11. Flux Density Curve

located below the surface appear as irregular rough hazy indications. The width of a subsurface discontinuity indication varies with the depth of its location below the surface. Correct interpretation of indications caused by subsurface discontinuities requires a certain amount of skill on the part of the operator.

511 DEMAGNETIZATION REQUIREMENTS

A common error is the assumption that, if a specimen is to be magnetized in a second direction, i.e., circular magnetization followed by longitudinal magnetization, it is necessary to demagnetize the specimen between the two operations. This is not so, since the fields are not impressed simultaneously and two variant magnetic fields cannot exist in the same area at the same time. The last applied field will drive out the residual field from the preceding magnetization, providing the magnetizing force last applied is equal to or of higher magnitude than the previous one. When demagnetization is required as detailed in paragraph 209.4 it is important because it provides a method for accomplishing the removal of the unwanted residual field. A field indicator is used after performing demagnetization on an article to assure that the residual field strength has been reduced to the desired level. In some instances it has been found extremely difficult to accomplish demagnetization of large specimens such as a rocket motor casing. Shifting the specimen to align it in an east-west position from an original north-south position facilitates the demagnetization. The reason for this is the influence of the earth's magnetic field.

512 FINAL CLEANING

Magnetic particles are completely removed from all specimens after test and demagnetization. Cleaning is accomplished by use of air, solvents, washes and wiping equipment suitable to the size and complexity of the task. After cleaning the specimen

is returned to its original state by the removal of all plugs used to seal holes and cavities during the testing process.

CHAPTER 6: CLASSIFICATION OF DISCONTINUITIES
TABLE OF CONTENTS

Paragraph		Page
600	GENERAL	6-3
601	DISCONTINUITIES	6-3
	1. General	6-3
	2. Surface Indications	6-3
	3. Subsurface Indications	6-3
	4. Nonrelevant Indications	6-4
602	CLASSIFICATION OF DISCONTINUITIES BY ORIGIN	6-5
	1. General	6-5
	2. Inherent Disconuities	6-5
	3. Processing Discontinuities	6-6
	4. Service Discontinuities	6-11
603	PRESERVATION OF INDICATIONS	6-13
	1. General	6-13
	2. Lacquer Transfer Technique	6-13
	3. Photographic Technique (Nonfluorescent)	6-13
	4. Photographic Technique (Fluorescent)	6-14
	5. Transparent Tape Transfer Technique	6-15

Figure 6-1	Surface Discontinuities in Weld	6-4
Figure 6-2	Sub-Surface Discontinuities in Weld	6-4
Figure 6-3	Nonrelevant Indications Under Head of Bolt	6-5
Figure 6-4	Cracks in Compressor Blades	6-7
Figure 6-5	Forging Laps	6-7
Figure 6-6	Forging Flakes	6-8
Figure 6-7	Seams	6-8
Figure 6-8	Lamination	6-9
Figure 6-9	Grinding Cracks	6-10
Figure 6-10	Heat Treat Cracks	6-11
Figure 6-11	Fatigue Cracks	6-12
Figure 6-12	Photographing Fluorescent Indications	6-14

CHAPTER 6: CLASSIFICATION OF DISCONTINUITIES

600 GENERAL

In the previous chapters attention has been focused on properly producing indications of discontinuities in ferromagnetic articles. Much depends on the test technique used, but the end result of the test determines whether the article is used, reworked, or scrapped. Once the discontinuities are indicated, the next step concerns their nature and extent, i.e., the indication is to be interpreted. The greatest aid in interpretation is a knowledge of what is likely to be present in any given instance. Knowing then, the history of a particular article, what it is made of and what processes it has been through, serves to form a logical starting point for interpretation of an indication. Knowing what to look for, when and where to look for it, requires understanding of the discontinuities, their character, and likely locations. Every magnetic particle pattern produced is due to some magnetic disturbance set up in a leakage field, but the pattern cannot in itself reveal what the discontinuity is. Therefore, the inspector must be able to determine whether there is a serious crack, warranting rejection of the article, some insignificant discontinuity or some wholly unimportant or non-relevant magnetic disturbance. It is difficult to overstate the importance of locating a discontinuity as any discontinuity may constitute a stress riser leading to ultimate failure of an article destined for a service where it will be highly and repeatedly stressed. So the use to which the article will be put as well as the severity of the condition found, have a definite bearing on the inspection findings.

601 DISCONTINUITIES

1. GENERAL

Whether a discontinuity of a given type is a defect is a matter of degree, frequency, or location, but in all cases it is a defect only when its presence interferes or is likely to interfere with the use for which the specimen is designed.

2. SURFACE INDICATIONS

Surface discontinuities, as a class, produce sharp, distinct, clean cut, and tightly held indication patterns. This is particularly true of the closed-lipped discontinuities, which are difficult to see and are objectionable from the standpoint of service or subsequent processing requirements. (See Figure 6-1.)

3. SUBSURFACE INDICATIONS

Subsurface discontinuities tend to produce indications which are less distinct, forming diffused or fuzzy patterns rather than the sharp outlined indications observed from surface discontinuities. (See Figure 6-2.)

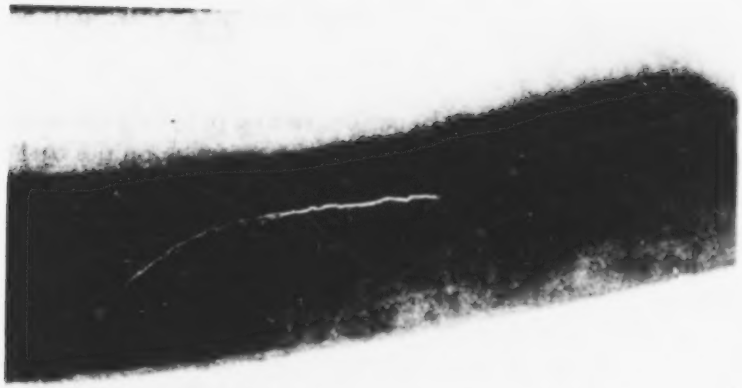

Figure 6-1. Surface Discontinuities Steel Flange

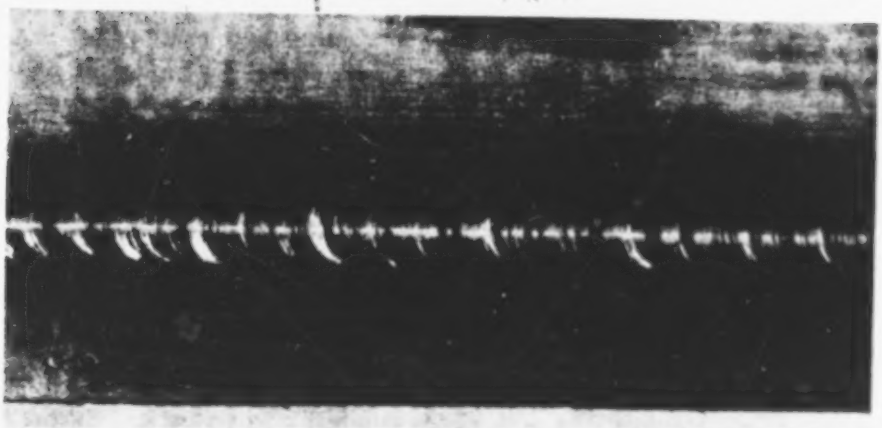

Figure 6-2. Sub-Surface Discontinuities in Weld

4. NON-RELEVANT INDICATIONS

The group of nonrelevant magnetic disturbances not due to discontinuities or actual breaks in the metal, must be recognized; otherwise, entirely wrong interpretations may lead to scrapping of perfectly sound articles. The causes of nonrelevant indications are numerous. They may result from distortions of fields caused by abrupt variation in the specimen shape; rough surfaces, which cause a mechanical rather than a magnetic hold on the testing medium or a variety of other reasons. These types of indications are similar to those of a crack, but closer examination will reveal that they are nonrelevant. (See Figure 6-3.)

Figure 6-3. Inherent Discontinuity - Inclusion

602 CLASSIFICATION OF DISCONTINUITIES BY ORIGIN

1. GENERAL

In a comprehensive view of the entire list of discontinuities which can be located by magnetic particle testing, it is logical to think of the life history of the metal, from the time it first solidifies from the fluid state, down through its fabrication into useful form, and finally, ending when it has simply worn out or has fractured, as a result of fatigue or other causes. Looking at these progressive periods in the life of any given article, discontinuities can be grouped into three stages: inherent, processing and service.

2. INHERENT DISCONTINUITIES

Inherent discontinuities are the discontinuities which are related to the melting and original solidification of the metal in the ingot. As the metal is poured, gas bubbles and slag are entrapped in the ingot. The ingot is then cropped, which removes most of the impurities gathered in the top; however, some entrapped discontinuities finally find their way into the finished product. Following is a list of the more common inherent discontinuities which may occur. (See Figure 6-3.)

a. Inclusions. These are nonmetallic impurities such as slag, oxides, and sulphides, which are present in the original ingot. In the rolling of billets and bar stock, these materials are rolled out lengthwise to form long stringers, or lines, of nonmagnetic foreign materials. In bar stock and forgings they are often spoken of as nonmetallic inclusions or nonmetallic stringers. Inclusions in bar stock give straight indications parallel to the longitudinal axis of the material, usually appearing as fine lines quite tightly adherent. They often are short and are likely to occur in groups. They

seldom appear on the original bar surface, but are commonly found on machined surfaces. In forgings, they parallel the grain flow lines. They are not, in general, objectionable except when they occur in critical areas, on highly stressed surfaces, or in unusual numbers.

b. Blowholes. Blowholes are formed by gas which is insoluble in the molten metal and is trapped when the metal solidifies. As the ingot is worked into fabricated products, the blowholes are elongated and their sides brought closer together. In finished articles, they often appear as seams or laminations, depending on their location.

c. Pipe. Pipe is a discontinuity in the center of the ingot, caused by internal shrinks, or cavities, during solidification, which have become elongated in the rolling operations. In fabricated articles, they usually are found a considerable distance below the surface.

d. Segregations. When an ingot solidifies, the distribution of the various elements or compounds generally is not uniform throughout the mass of the ingot. Marked segregations of some constituents may thus occur. As the ingot is forged and then rolled, these segregations are elongated and reduced in cross section. Upon subsequent processing, they may appear as very thin parallel lines or bands, known as banding. Banding is not usually considered significant.

3. PROCESSING DISCONTINUITIES

Processing discontinuities are those brought out or produced by forming or fabrication operations. These discontinuities are divided into two main categories, primary processing discontinuities, which include those caused during casting, rolling, forging, and drawing; and finish processing discontinuities, which include those caused by machining, final forming, grinding, heat treating, and plating.

a. Cracks. Cracks may develop during such fabrication processes as forging, rolling, drawing, bending, and welding. In hot fabricating processes, they are often caused by shrinkage during cooling. They are also developed as ruptures in the metal caused by severe distortion at sudden changes in section. Shrinkage cracks or hot tears develop during solidification of the metal since it contracts as it freezes; tension stresses caused by this contraction may rupture the metal. (See Figure 6-4.)

b. Bursts. Bursts are ruptures that occur in a forging, often as the result of forging at a too high temperature. They are large and very seldom healed during subsequent working. (See Figure 6-5.)

c. Forging. This is the method of forming metal be heating it to a plastic condition and hammering or pressing it into the desired shape by use of dies. Typical discontinuities developed in this process are:

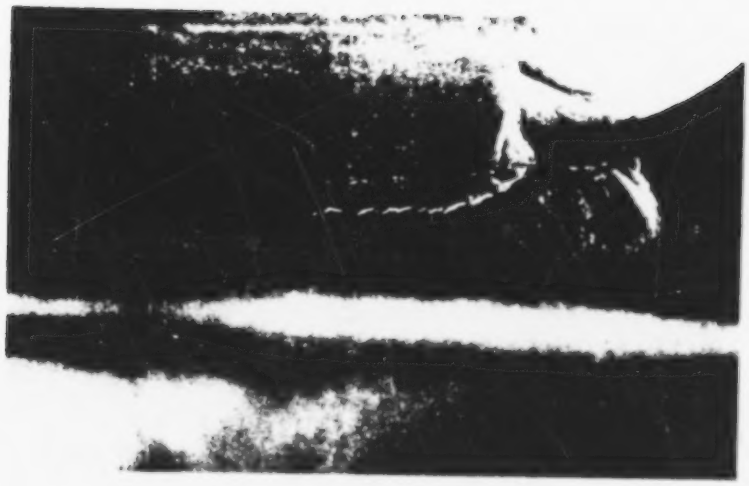

Figure 6-4. Crack in Weldment

(1) Forging Laps. These are the result of metal being folded over and forced into the surface but not welded to form a single piece. They may be caused by faulty dies, oversized dies, oversized blanks, or improper handling of the metal in the die. They may occur on any part of the forging.

(2) Twist Cracks. These are found in crankshaft forgings and are produced when the shaft is twisted to the position of the various throw bearings of the shaft. They are usually found on the surface of the twisted section.

(3) Surface Tears. These are actually surface ruptures caused by improper manipulation in the die.

Figure 6-5. Forging Burst

d. Forging Flakes. Forging flakes are internal ruptures usually found only in heavy alloy steel forgings. They are caused during cooling and, being internal, are seldom revealed by magnetic particle testing until the forging has been machined down to the area of the flakes.

e. Rolling. Rolling steel into bars and plate may also introduce discontinuities not present in the original billet. (See Figure 6-6.)

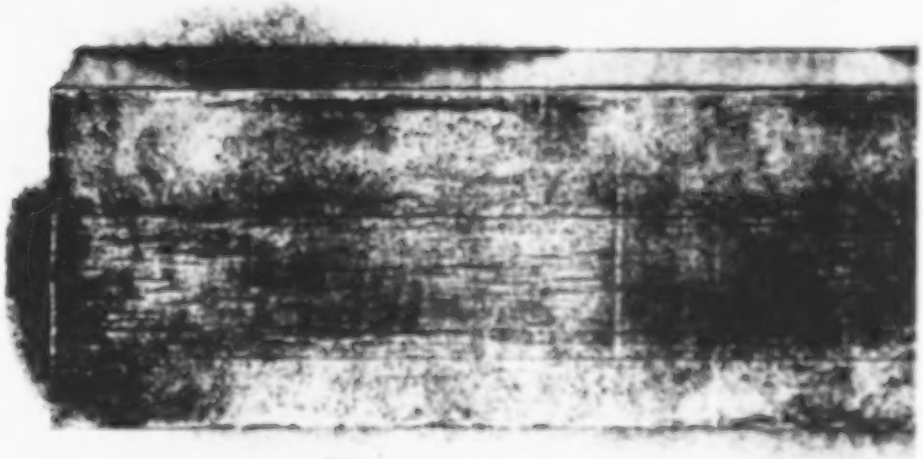

Figure 6-6. Rolled Plate

(1) Seams. These are surface discontinuities, generally long, straight, and parallel to the longitudinal axis of the bar. Seams are discontinuities in steel that originate from blow-holes, cracks, splits, and tears introduced in earlier fabricating operations. The original discontinuity can be closed by further processing making the distance between adjacent faces very small. (See Figure 6-7.)

Figure 6-7. Seams

(2) Laminations. Laminations are thin, flat discontinuities found in steel plate or strip and are a result of gas inclusions or pipe in the original ingot. (See Figure 6-8.)

(3) Laps. These are similar to seams and may result from improper rolling practices. In working down the billet into a bar, corners may be folded over or small fins of metal, forced out between the rolls, may be flattened into the bar and form a lap. They are usually straight and parallel to the longitudinal axis, and are similar to seams but extend into the bar at an angle not normal to the surface.

Figure 6-8. Lamination

f. Grinding Checks. Grinding of hardened surfaces frequently introduce cracks. These are actual thermal cracks similar to the heat treating and hardening cracks. The overheating in this case occurs under the grinding wheel and may be due to the wheel becoming glazed so that it rubs instead of cuts the surface. (See Figure 6-9.) These types of cracks are generally at right angles to the direction of grinding. Grinding cracks are usually shallow, but, as they are separations of the metal and are very sharp at their roots, they are often potential sources of fatigue failures. Case-hardened articles are also sensitive to improper grinding, and readily develop cracks unless proper precautions are taken.

g. Pickling and Etching Cracks. When removing scale by pickling, precleaning prior to electroplating, or electroplating itself in which hydrogen is generated at the surface of the article, cracks can be formed, or minute cracks already present may be enlarged. Cracking of this type is encountered in articles that are hardened by heat treatment or cold-work, as in cold-worked or heat-treated springs. The cracks usually develop at points where minute cracks or excessive internal stresses exist. Cracks which

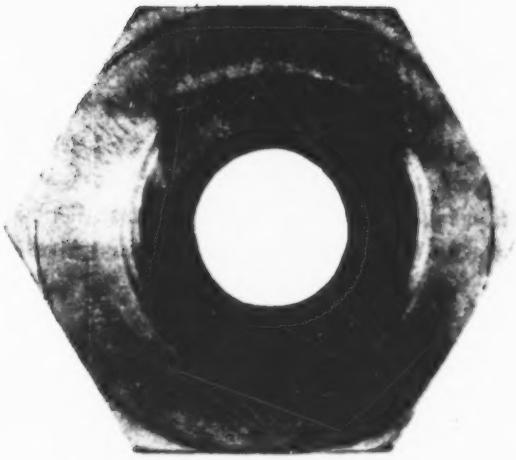

Figure 6-9. Grinding Cracks

are formed or enlarged by pickling, precleaning, or electroplating are usually not detected before the treatment; therefore, it is important that the testing be performed both prior to and subsequent to plating operations.

h. Machining Tears. When an article is worked with a dull tool or by cutting to too great a depth, the metal may not break away clean and the tool may leave a rough, torn surface. Close examination of this rough, torn surface may reveal numerous short discontinuities. Machining tears may be too deep to be completely removed by later finish machining or grinding operations. They may also be covered over and concealed by the burnishing action of finishing or polishing operations.

i. Heat Treating. In this operation the metal is heated and cooled under controlled conditions for the purpose of hardening or securing other desired characteristics of grain structure or strength in the finished article. Cracking during this process usually results from stresses set up by unequal heating or cooling of certain portions of the piece. Cracks can occur either on the heating or cooling cycles. The cracks are usually deep, seldom follow a definite pattern and may be in any direction on the article. Quenching cracks often start at a thin cross-section, or where thick and thin cross-sections meet. (See Figure 6-10.)

j. Welding. Welding, a process for joining metals, involves heating the edges to be joined by means of a torch or electric arc until they reach the fusion point. Additional weld metal is supplied by a welding rod which is melted by the torch flame or arc and flowed into the space between the edges being joined after which the whole is allowed to cool and "freeze" into a single piece.

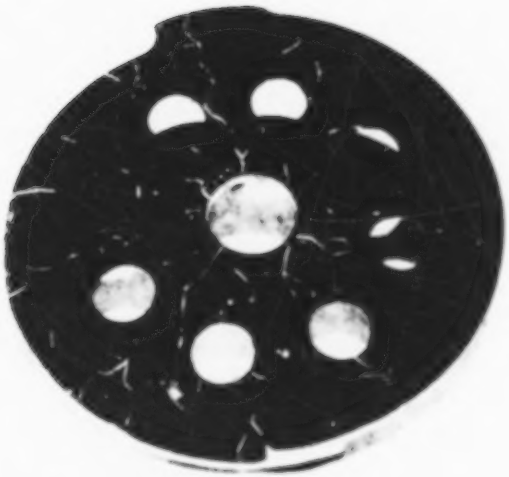

Figure 6-10. Heat Treat Cracks

(1) Surface shrink cracks are the most common discontinuities found in weldments. They are frequently found at a crater where the welding rod is removed from the work. Crater cracks often are star-shaped, running out from the center of the crater, though they may be single cracks. Longitudinal shrink cracks usually occur in the center of the weld as well as near the edges of the bead.

(2) Cracks often appear in the parent metal at a point adjacent to the weld, particularly when hard steels are welded. These cracks are caused by stresses induced in the material from expansion and contraction due to thermal changes.

(3) Lack of fusion is found in welds where temperature has not been high enough to melt the parent metal to the weld, or by improper positioning of the welding torch, causing a lack of bond.

(4) Lack of complete penetration is caused by failure of the weld metal to penetrate completely through the joint before solidifying.

(5) Overlapping is a common condition found in weldments. It is caused by leaving a toe of the weld overlapping the parent metal instead of being fused to it. The indication appears along the edge of the overlap.

(6) Slag and gas inclusions are the result of impurities being trapped as the metal solidifies.

4. SERVICE DISCONTINUITIES

Service or fatigue discontinuities are by far the most important discontinuities to be considered. The articles that are in service, which may develop defects due to metal

fatigue, are considered extremely critical and demand close attention of nondestructive testing personnel.

a. Fatigue Cracks. Fatigue cracks normally develop in, or adjacent to, areas of stress concentration. These may include oil holes, fillets, keyways, splines, and threads. These areas are usually designed to withstand the stresses imposed; however, faulty design, such as oil holes with sharp edges, or poorly finished or insufficient fillets, often result in a concentrated stress much higher than expected. Also, the presence of any discontinuities in an area of stress concentration greatly increases the possibilities of fatigue failure. (See Figure 6-11.)

(1) A fatigue failure is progressive in that it starts as a fine submicroscopic crack or an accumulation of such cracks, and spreads under the action of repeated stressing. This spreading action continues until the cross-section of the article has been reduced to such an extent that the article ultimately fractures statically under a low load. Once a crack has started, its ability to progress is greatly increased by the stress concentration resulting from the crack itself. It is interesting to note that the rate of progress of fatigue cracks may vary, depending on the stress condition. In some instances the progress of the crack may be slow. This has been observed in some types of articles, which have appeared to operate many hours in a cracked condition. In other instances where high stresses are continually applied, particularly to brittle materials, the progress of the crack may be practically instantaneous.

(2) Since cracked articles are always a potential source of failure, their detection during inspection is of prime importance. The rapidly rotat-

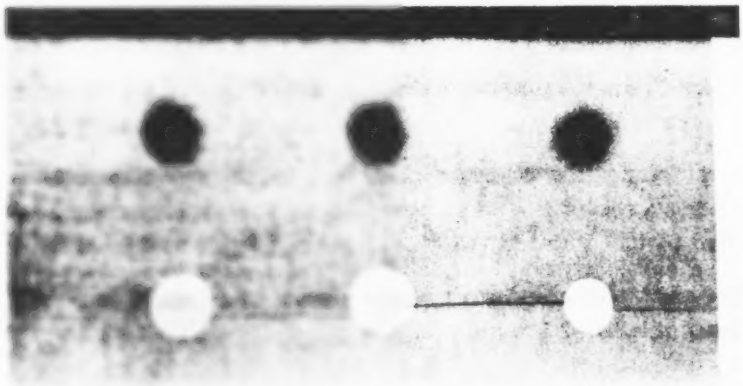

Figure 6-11. Fatigue Cracks

ing and reciprocating parts of an engine or the vibration of the missile structure produce many applications of repeated stress. Fatigue cracks start as fine submicroscopic cracks and become detectable by inspection as soon as they reach any measurable length. Since a small fatigue crack may be confused with a much less significant discontinuity, particular care is to be exercised in evaluating all indications. Fatigue cracks are always cause for rejection, unless the article can be salvaged by rework. A fatigue crack often identified by its direction in relation to the applied stresses. For example, primary discontinuities, such as seams and inclusions, normally run in the direction of the grain flow, while fatigue cracks in most areas run transverse to the grain flow.

603 PRESERVATION OF INDICATIONS

1. GENERAL

It is often desirable to preserve magnetic particle indications for future reference. There are a number of methods by which this purpose can be accomplished.

2. LACQUER TRANSFER TECHNIQUE

If it is desired to retain the indication in place on the specimen, a transparent lacquer is sprayed over the discontinuity. Spraying or dipping are more effective than brushing because the latter, no matter how carefully done, tends to disturb and mar the pattern. Stock lacquers are thinned at least three to one before being used for this purpose.

a. Wet Method. When using the wet method, the surface is allowed to dry before the lacquer is applied. Drying may be facilitated by the use of naptha.

b. Lacquer Mixtures. There is another use for lacquer which employs a colored lacquer as a suspensoid for a powder of a different color. The magnetic field is applied before the lacquer sets, and the pattern becomes permanently fixed after the lacquer dries. A white lacquer with black paste in suspension gives a black pattern on a white background and can be applied on practically any surface, or the lacquer can be applied first, allowed to dry, and the powder applied afterwards. The resultant patterns are then photographed.

3. PHOTOGRAPHIC TECHNIQUE (NONFLUORESCENT)

Direct photography makes an excellent record of nonfluorescent powder patterns for future reference.

4. PHOTOGRAPHIC TECHNIQUE (FLUORESCENT)

When photographing fluorescent indications, a K2 or G filter over the lens of the camera is essential to filter out black light. Specimens require thorough cleaning of random fluorescent smears. Another requirement is a darkened room with two 100-watt black lights placed to bring out the brilliance of the fluorescent indications, with as little reflective highlighting of the article as possible. (See Figure 6-12.) A light-colored, nonfluorescent background is desirable so that the black outline of the article shows in silhouette.

a. Polaroid Film. Most existing camera equipment can use one of the various film adaptors on the market which will accommodate polaroid film pack. This film is available in various speeds and in both colored and black and white. Where adaptable it is suggested that this method of documentation be considered since test results are immediately obtainable.

b. Panchromatic Film Exposure Time. Exposure time varies greatly with the brilliance of the indications. With a G filter, exposures vary from 20 minutes, at F32 for heavy bright indications, up to one hour, at F22 for fine indications of low intensity. If the thinner K2 filter is used, the exposure time is cut about half, and the definition of the specimen is improved, but undesirable highlights from black light may come through stronger. To increase the definition of the specimen and separate it from the background, the K2 filter is used for a short time during the exposure. The white light is to be placed so that the indication areas are not illuminated, either directly or by the highlight from the white light.

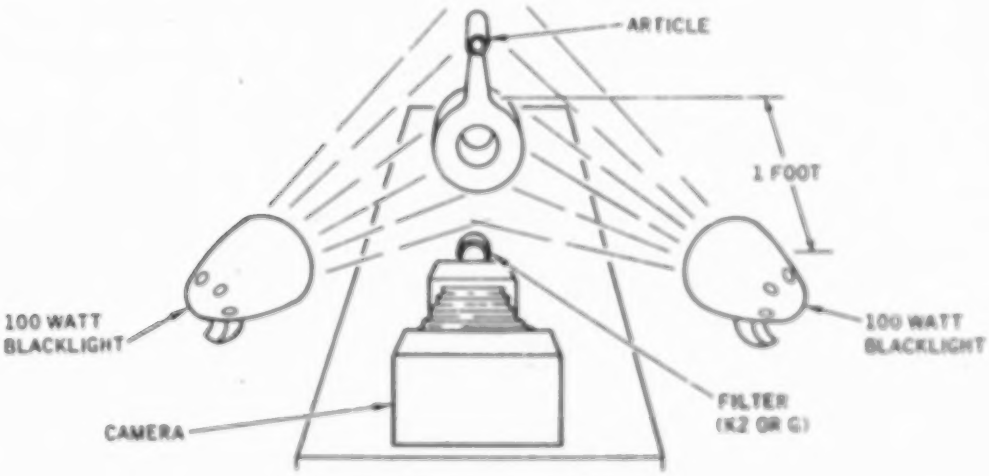

Figure 6-12. Photographing Fluorescent Indications

c. Negative Quality. Since there is no scientific means for calculating exposure, a test negative is made for each setup. The negative, after normal development, shows the indications in solid black, in an area no wider than the specimen. The rest of the negative is light, but with the article clearly defined. It is to be checked especially for highlights interfering with, or resembling, the indications. Such highlights can often be moved, weakened or diffused, or eliminated by repositioning of lights.

d. Printing. Printing can be handled normally, usually on a medium grade paper. The object is to get a very dark impression of the article as it is seen visually under black light, with clear white indications in the picture where fluorescent indications appear on the article.

5. TRANSPARENT TAPE TRANSFER TECHNIQUE

Probably the most convenient and by far the most widely used method of preserving indications and patterns is the transparent tape method. If the dry magnetic particle method is used, the excess powder is blown carefully away or otherwise removed. If the wet method is employed sufficient time is allowed for the solvent to evaporate from the particles composing the indication. A strip of transparent tape is then carefully laid over the indication and gently pressed down with the fingers or a rounded stick. The tape is then peeled off, bringing the indication with it. The strip is then laid on white paper for photographing, on tracing paper for blueprinting, or on a page of a permanent record book. With care, the transferred pattern remains well-defined and accurate in every detail, and may serve as well as the original pattern as a basis for judging and studying the indication.

CHAPTER 7: COMPARISON AND SELECTION OF NDT PROCESSES
TABLE OF CONTENTS

Paragraph		Page
700	GENERAL	7-3
701	METHOD IDENTIFICATION	7-3
702	NDT DISCONTINUITY SELECTION	7-3
703	DISCONTINUITY CATEGORIES	7-3
704	DISCONTINUITY CHARACTERISTICS AND METALLURGICAL ANALYSIS	7-6
705	NDT METHODS APPLICATION AND LIMITATIONS	7-6
706	BURST	7-8
707	COLD SHUTS	7-10
708	FILLET CRACKS (BOLTS)	7-10
709	GRINDING CRACKS	7-14
710	CONVOLUTION CRACKS	7-16
711	HEAT-AFFECTED ZONE CRACKING	7-18
712	HEAT TREAT CRACKS	7-20
713	SURFACE SHRINK CRACKS	7-22
714	THREAD CRACKS	7-24
715	TUBING CRACKS (INCONEL "X")	7-26
716	HYDROGEN FLAKE	7-28
717	HYDROGEN EMBRITTLEMENT	7-30
718	INCLUSIONS	7-32
719	INCLUSIONS	7-34
720	LACK OF PENETRATION	7-36
721	LAMINATIONS	7-38
722	LAPS AND SEAMS	7-40
723	LAPS AND SEAMS	7-42
724	MICRO-SHRINKAGE	7-44
725	GAS POROSITY	7-46
726	UNFUSED POROSITY	7-48
727	STRESS CORROSION	7-50
728	HYDRAULIC TUBING	7-52
729	MANDREL DRAG	7-54
730	SEMICONDUCTORS	7-56
31	HOT TEARS	7-58
732	INTERGRANULAR CORROSION	7-60

TABLE OF CONTENTS (CONT)

		Page
Figure 7-1	Liquid Penetrant Test	7-4
Figure 7-2	Magnetic Particle Test	7-4
Figure 7-3	Ultrasonic Test	7-4
Figure 7-4	Eddy Current Test	7-6
Figure 7-5	Radiographic Test	7-6
Figure 7-6	Burst Discontinuities	7-9
Figure 7-7	Cold Shuts Discontinuity	7-11
Figure 7-8	Fillet Crack Discontinuity	7-13
Figure 7-9	Grinding Crack Discontinuity	7-15
Figure 7-10	Convolution Cracks Discontinuity	7-17
Figure 7-11	Heat-Affected Zone Cracking Discontinuity	7-19
Figure 7-12	Heat Treat Cracks Discontinuity	7-21
Figure 7-13	Surface Shrink Crack Discontinuity	7-23
Figure 7-14	Thread Crack Discontinuity	7-25
Figure 7-15	Tubing Crack Discontinuity	7-27
Figure 7-16	Hydrogen Flake Discontinuity	7-29
Figure 7-17	Hydrogen Embrittlement Discontinuity	7-31
Figure 7-18	Weldment Inclusion Discontinuity	7-33
Figure 7-19	Wrought Inclusion Discontinuity	7-35
Figure 7-20	Lack of Penetration Discontinuity	7-37
Figure 7-21	Lamination Discontinuity	7-39
Figure 7-22	Laps and Seams Discontinuity in Rolled Threads	7-41
Figure 7-23	Laps and Seams Discontinuity in Wrought Material	7-43
Figure 7-24	Micro-Shrinkage Discontinuity	7-45
Figure 7-25	Gas Porosity Discontinuity	7-47
Figure 7-26	Unfused Porosity Discontinuity	7-49
Figure 7-27	Stress Corrosion Discontinuity	7-51
Figure 7-28	Hydraulic Tubing Discontinuity	7-53
Figure 7-29	Mandrel Drag Discontinuity	7-55
Figure 7-30	Semiconductor Discontinuity	7-57
Figure 7-31	Hot Tear Discontinuity	7-59
Figure 7-32	Intergranular Corrosion Discontinuity	7-61

CHAPTER 7: COMPARISON AND SELECTION OF NDT PROCESSES

700 GENERAL

The purpose of this chapter is to summarize the characteristics of various types of discontinuities, and to list the NDT methods which may be employed to detect each type of discontinuity.

The relationship between the various NDT methods and their capabilities and limitations when applied to the detection of a specific discontinuity will be shown. Such variables as type of discontinuity (inherent, process, or service), manufacturing processes (heat treating, machining, or plating), and limitations (metallurgical, structural, or processing) all will help determine the sequence of testing and the ultimate selection of one test method over another.

701 METHOD IDENTIFICATION

Figures 7-1 through 7-5 illustrate five NDT methods. Each illustration shows the three elements involved in all five tests, the different methods in each test category, and tasks that may be accomplished with a specific method.

702 NDT DISCONTINUITY SELECTION

The discontinuities that will be reviewed in paragraphs 706 through 732 are only a part of the many hundreds that are associated with the various products of the aerospace industry. During the selection of discontinuities for inclusion in this section, only a few of those discontinuities which would not be radically changed under different conditions of design, configuration, standards, and environment were chosen.

703 DISCONTINUITY CATEGORIES

Each of the specific discontinuities are divided into three general categories: inherent, processing, and service. Each of these categories is further classified as to whether the discontinuity is associated with ferrous or nonferrous materials, the specific material configuration, and the manufacturing processes if applicable.

1. INHERENT DISCONTINUITIES

Inherent discontinuities are those discontinuities that are related to the solidification of the molten metal. There are two types.

a. Wrought. Inherent wrought discontinuities cover those discontinuities which are related to the melting and original solidification of the metal or ingot.

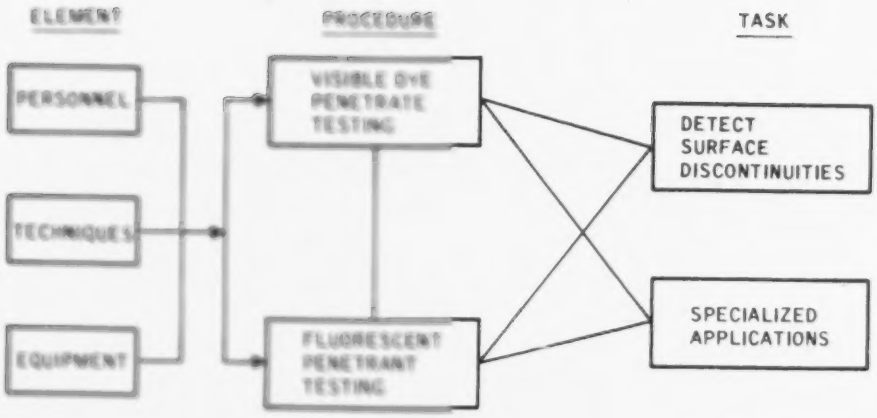

Figure 7-1. Liquid Penetrant Test

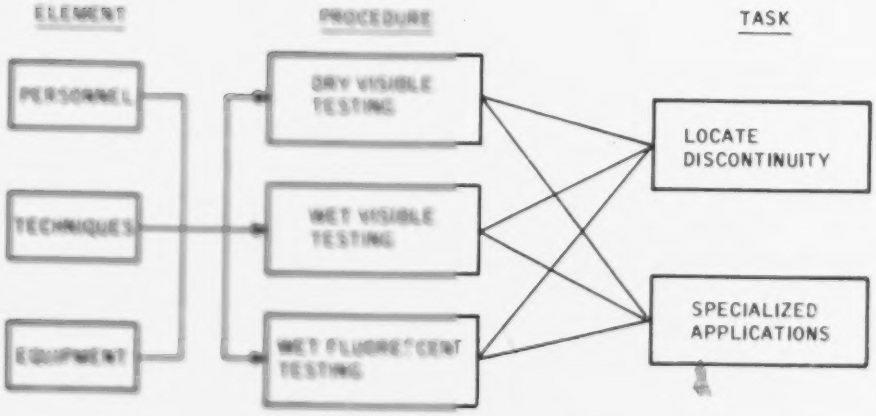

Figure 7-2. Magnetic Particle Test

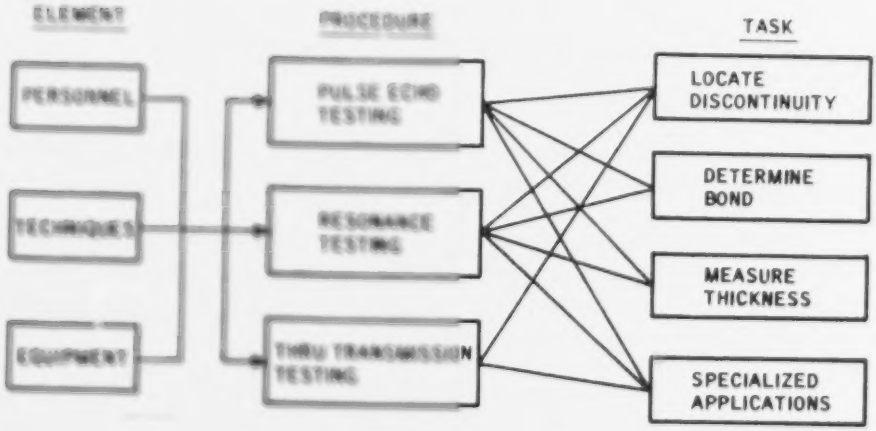

Figure 7-3. Ultrasonic Test

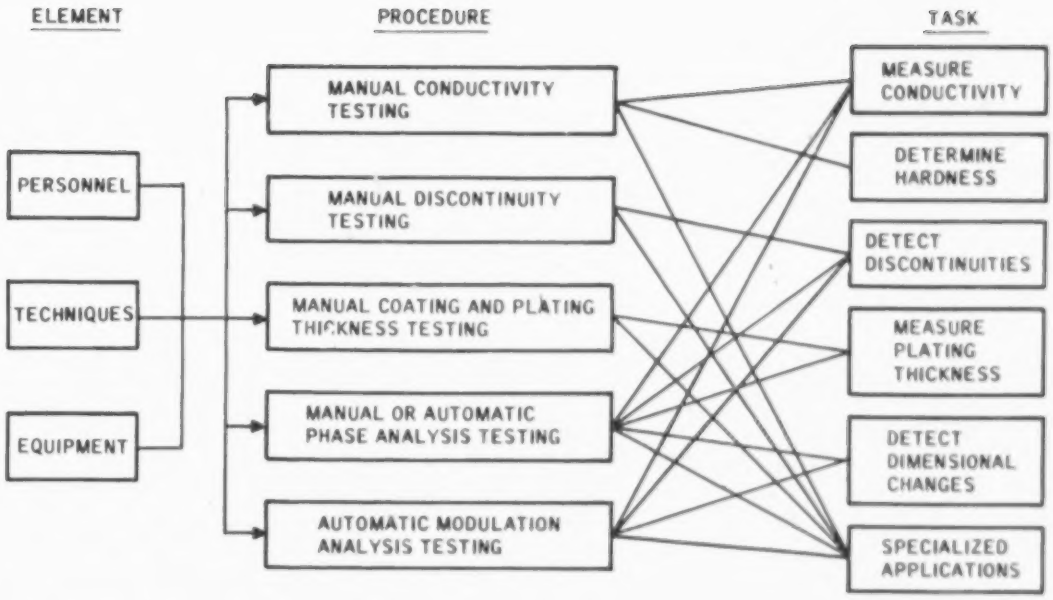

Figure 7-4. Eddy Current Test

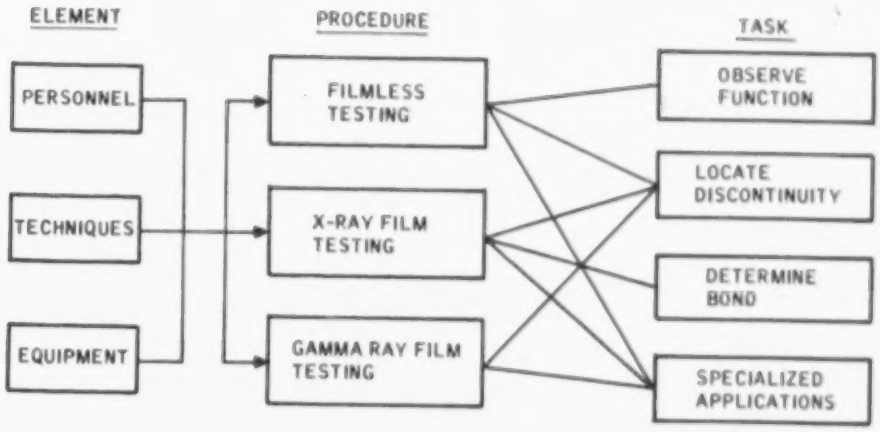

Figure 7-5. Radiographic Test

b. Cast. Inherent cast discontinuities are those discontinuities which are related to the melting, casting, and solidification of the cast article. It includes those discontinuities that would be inherent to manufacturing variables such as inadequate feeding, gating, excessively high pouring temperature, entrapped gases, handling, and stacking.

2. PROCESSING DISCONTINUITIES

Processing discontinuities are those discontinuities that are related to the various manufacturing processes such as machining, forming, extruding, rolling, welding, heat treating, and plating.

3. SERVICE DISCONTINUITIES

Service discontinuities cover those discontinuities that are related to the various service conditions such as stress corrosion, fatigue, and errosion.

704 DISCONTINUITY CHARACTERISTICS AND METALLURGICAL ANALYSIS

Discontinuity characteristics encompasses an analysis of the specific discontinuity and reference actual photos that illustrate examples of the discontinuity. The discussion will cover:

a. Origin and location of discontinuity (surface, near surface, or internal).

b. Orientation (parallel or normal to the grain).

c. Shape (flat, irregularly shaped, or spiral).

d. Photo (micrograph and/or typical overall view of the discontinuity).

e. Metallurgical analysis (how the discontinuity is produced and at what stage of manufacture).

705 NDT METHODS APPLICATION AND LIMITATIONS

1. GENERAL

The technological accomplishments in the field of nondestructive testing have brought the level of test reliability and reproducibility to a point where the design engineer may now selectively zone the specific article. This zoning is based upon the structural application of the end product and takes into consideration the environment as well as the loading characteristics of the article. Such an evaluation in no way reduces the end reliability of the product, but it does reduce needless rejection of material that otherwise would have been acceptable.

Just as the structural application within the article varies, the allowable discontinuity size will vary depending on the method of manufacture and configuration. For example, a die forging that has large masses of material and extremely thin web sections would not require the same level of acceptance for the whole forging. The forging can be zoned for rigid control where the structural applications are higher, and zoned for less rigid control where the structural requirements permit larger discontinuities.

The nondestructive testing specialist must also select the method which will satisfy the design objective of the specific article and not assume that all NDT methods can produce the same reliability for the same type of discontinuity.

2. SELECTION OF THE NDT METHOD

In selecting the NDT method for the evaluation of a specific discontinuity it should be kept in mind that NDT methods may supplement each other and that several NDT methods may be capable of performing the same task. The selection of one method over another is based upon variables such as:

a. Type and origin of discontinuity

b. Material manufacturing processes

c. Accessibility of article

d. Level of acceptability desired

e. Equipment available

f. Cost

To satisfactorily develop knowledge of the above variables, a planned analysis of the task must be made for each article requiring NDT testing.

The NDT methods listed for each discontinuity in paragraphs 706 through 732 are in order of preference for that particular discontinuity. However, when reviewing that portion of the chapter it should be kept in mind that the rapidly developing NDT field and new techniques may alter the order of test preference.

3. LIMITATIONS

The limitations applicable to the various NDT methods will vary with the applicable standard, the material, and the service environment. Limitations not only affect the NDT test, but in many cases the structural reliability of the test article is affected. For these reasons, limitations that are listed for one discontinuity may also be applicable to other discontinuities under slightly different conditions of material or environment. In addition, the many combinations of environment, location, material, and test capability do not permit mentioning all limitations that may be associated with a specific discontinuity. The intent of this chapter is fulfilled if you are made aware of the many factors that influence the selection of a valid NDT test.

706 BURST

1. CATEGORY. Processing

2. MATERIAL. Ferrous and Nonferrous Wrought Material

3. DISCONTINUITY CHARACTERISTICS

Surface or internal. Straight or irregular cavities varying in size with large interfaces or very tight. Usually parallel with the grain. Found in wrought material which required forging, rolling, or extruding. (See Figure 7-6.)

4. METALLURGICAL ANALYSIS

a. Forging bursts are surface or internal ruptures which are attributed to processing at too low a temperature, or excessive working or metal movement during the forging, rolling, or extruding operation.

b. A burst does not have a spongy appearance and, therefore, is distinguishable from a pipe, even if it should occur at the center.

c. Bursts are often large and very seldom healed during subsequent working.

5. NDT METHODS APPLICATION AND LIMITATIONS

a. ULTRASONIC TESTING METHOD

(1) Normally used for the detection of internal bursts.

(2) Bursts are definite breaks in the material and they resemble a crack, producing a very sharp reflection on the scope.

(3) Ultrasonic testing is capable of detecting varying degrees of burst which could not be detected by other NDT methods.

(4) Nicks, gouges, raised areas, tool tears, foreign material, gas bubbles on the article may produce adverse ultrasonic test results.

b. EDDY CURRENT TESTING METHOD. Not normally used. Testing is restricted to wire, rod, and other articles under 0.250 inch diameter.

c. MAGNETIC PARTICLE TESTING METHOD

(1) Usually used on wrought ferrous material that has surface or exposed internal burst.

(2) Results are limited to surface and near surface evaluation.

d. LIQUID PENETRANT TESTING METHOD. Not normally used. When fluorescent penetrant is to be applied to an article previously dye penetrant tested, all traces of dye penetrant should first be removed by prolonged cleaning in applicable solvent.

e. RADIOGRAPHIC TESTING METHOD. Not normally used. Such variables as the direction of the burst, close interfaces, wrought material, discontinuity size, and material thickness restrict the capability of radiography.

A FORGING EXTERNAL BURST

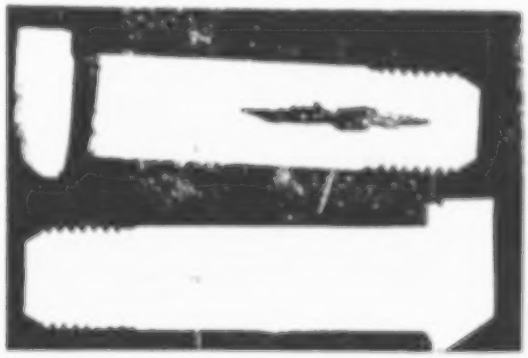

B BOLT INTERNAL BURST

C ROLLED BAR INTERNAL BURST

D FORGED BAR INTERNAL BURST

Figure 7-6. Burst Discontinuities

707 COLD SHUTS

1. CATEGORY. Inherent

2. MATERIAL. Ferrous and Nonferrous Cast Material

3. DISCONTINUITY CHARACTERISTICS

Surface and subsurface. Generally smooth indentations on the cast surface resembling a forging lap. (See Figure 7-7.)

4. METALLURGICAL ANALYSIS

Cold shuts are produced during casting molten metal. They may result from splashing, surging, interrupted pouring, or meeting of two streams of metal coming from different directions. Also, solidification of one surface before the other metal flows over it, the presence of interposing surface films on cold, sluggish metal, or any factor that will prevent a fusion where two surfaces meet will produce cold shuts. They are more prevalent in castings which are formed in a mold with several sprues or gates.

5. NDT METHODS APPLICATION AND LIMITATIONS

a. LIQUID PENETRANT TESTING METHOD.

(1) Normally used to evaluate surface cold shuts in both ferrous and nonferrous materials.

(2) Will appear as a smooth, regular, continuous, or intermittent indication, reasonably parallel to the cross section of the area in which it occurs.

(3) Liquid penetrant used for the testing of nickel base alloys (such as Inconel "X," Rene 41) should not exceed 0.3 percent sulfur.

(4) Certain castings may have surfaces which may be blind and from which removal of the excessive penetrants may be difficult.

(5) Geometric configuration (recesses, orifices, and flanges) may permit buildup of wet developer thereby masking any detection of a discontinuity.

b. MAGNETIC PARTICLE TESTING METHOD

(1) Normally used for the screening of ferrous materials.

(2) The metallurgical nature of 431 corrosion-resistant steel is such that in some cases magnetic particle testing indications are obtained which do not result from a crack or other harmful discontinuities. These indications arise from a duplex structure within the material, wherein one portion exhibits strong magnetic retentivity and the other does not.

c. RADIOGRAPHIC TESTING METHOD

(1) Normally detectable by radiography while testing for other casting discontinuities.

(2) Appear as a distinct dark line or band of variable length and width, and definite smooth outline.

(3) Casting configuration may have inaccessible areas which can only be detected by radiography.

d. ULTRASONIC TESTING METHOD. Not recommended. Cast structure and article configuration do not as a general rule lend themselves to ultrasonic testing.

e. EDDY CURRENT TESTING METHOD. Not recommended. Article configuration and inherent material variables restrict the use of this method.

A SURFACE COLD SHUT

B INTERNAL COLD SHUT

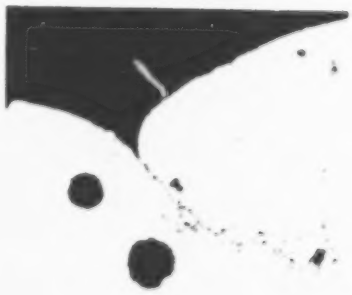

C SURFACE COLD SHUT MICROGRAPH

Figure 7-7. Cold Shuts Discontinuity

708 FILLET CRACKS (BOLTS)

1. CATEGORY. Service

2. MATERIAL. Ferrous and Nonferrous Wrought Material

3. DISCONTINUITY CHARACTERISTICS

Surface. Located at the junction of the fillet with the shank of the bolt and progressing inward. (See Figure 7-8.)

4. METALLURGICAL ANALYSIS

Fillet cracks occur where a marked change in diameter occurs, such as between the head-to-shank junction where stress risers are created. During the application of this bolt in service repeated loading takes place, whereby the tensile load fluctuates in magnitude due to the operation of the mechanism. These tensile loads can cause fatigue failure, starting at the point where the stress risers are built in. Fatigue failure, which is surface phenomenon, starts at the surface and propagates inward.

5. NDT METHODS APPLICATION AND LIMITATIONS

a. ULTRASONIC TESTING METHOD

(1) Used extensively for service associated discontinuities of this type.

(2) A wide selection of transducers and equipment enable on the spot evaluation for fillet crack.

(3) Being a definite break in the material, the scope pattern will be a very sharp reflection. (Actual propagation can be monitored by using ultrasonics.)

(4) Ultrasonic equipment has extreme sensitivity, and established standards should be used to give reproducible and reliable results.

b. LIQUID PENETRANT TESTING METHOD

(1) Normally used during in-service overhaul or troubleshooting.

(2) May be used for both ferrous and nonferrous bolts, although usually confined to the nonferrous.

(3) Will appear as a sharp clear indication.

(4) Structural damage may result from exposure of high strength steels to paint strippers, alkaline coating removers, deoxidizer solutions, etc.

(5) Entrapment under fasteners, in holes, under splices, and in similar areas may cause corrosion due to the penetrant's affinity for moisture.

c. MAGNETIC PARTICLE TESTING METHOD

(1) Normally used on ferrous bolts.

(2) Will appear as clear sharp indication with a heavy buildup.

(3) Sharp fillet areas may produce non-relevant magnetic indications.

(4) 17.7 pH is only slightly magnetic in the annealed condition, but becomes strongly magnetic after heat treatment, when it may be magnetic particle tested.

d. EDDY CURRENT TESTING METHOD. Not normally used for detection of fillet cracks. Other NDT methods are more compatible to the detection of this type of discontinuity.

e. RADIOGRAPHIC TESTING METHOD. Not normally used for detection of fillet cracks. Surface discontinuities of this type would be difficult to evaluate due to size of crack in relation to the thickness of material.

A FILLET FATIGUE FAILURE

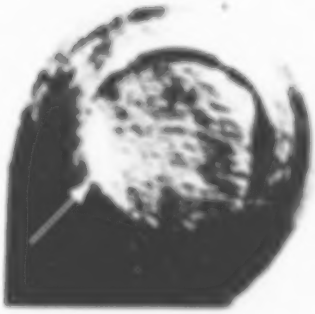

B FRACTURE AREA OF (A) SHOWING TANGENCY POINT OF FAILURE

C CROSS-SECTIONAL AREA OF FATIGUE CRACK IN FILLET SHOWING TANGENCY POINT IN RADIUS

Figure 7-8. Fillet Crack Discontinuity

709 GRINDING CRACKS

1. CATEGORY. Processing

2. MATERIAL. Ferrous and Nonferrous

3. DISCONTINUITY CHARACTERISTICS

Surface. Very shallow and sharp at the root. Similar to heat treat cracks and usually, but not always, occur in groups. Grinding cracks are generally at right angles to the direction of grinding. They are found in highly heat treated articles, chrome plated, case hardened and ceramic materials that are subjected to grinding operations. (See Figure 7-9.)

4. METALLURGICAL ANALYSIS

Grinding of hardened surfaces frequently introduces cracks. These thermal cracks are caused by local overheating of the surface being ground. The overheating is usually caused by lack of or poor coolant, a dull or improperly ground wheel, too rapid feed, or too heavy cut.

5. NDT METHODS APPLICATION AND LIMITATIONS

a. LIQUID PENETRANT TESTING METHOD

(1) Normally used on both ferrous and nonferrous materials for the detection of grinding cracks.

(2) Liquid penetrant indication will appear as irregular, checked, or shattered pattern of fine lines.

(3) Cracks are the most difficult discontinuity to indicate and require the longest penetration time.

(4) Articles that have been degreased may still have solvent entrapped in the discontinuity and should be allowed sufficient time for evaporation prior to the application of the penetrant.

b. MAGNETIC PARTICLE TESTING METHOD

(1) Restricted to ferrous materials.

(2) Grinding cracks are generally at right angles to grinding direction, although in extreme cases a complete network of cracks may appear, in which case they may be parallel to the magnetic field.

(3) Magnetic sensitivity decreases as the size of grinding crack decreases and as its depth below the surface increases.

c. EDDY CURRENT TESTING METHOD. Not normally used for detection of grinding cracks. Eddy current equipment has the capability and can be developed for a specific nonferrous application.

d. ULTRASONIC TESTING METHOD. Not normally used for detection of grinding cracks. Other forms or NDT are more economical, faster, and better adapted to this type of discontinuity than ultrasonics.

e. RADIOGRAPHIC TESTING METHOD. Not recommended for detection of grinding cracks. Grinding cracks are too tight and small. Other NDT methods are more suitable for detection of grinding cracks.

A TYPICAL CHECKED GRINDING CRACK PATTERN

B GRINDING CRACK PATTERN NORMAL TO GRINDING

C MICROGRAPH OF GRINDING CRACK

Figure 7-9. Grinding Crack Discontinuity

710 CONVOLUTION CRACKS

1. CATEGORY. Processing

2. MATERIAL. Nonferrous

3. DISCONTINUITY CHARACTERISTICS

Surface. Range in size from micro fractures to open fissures. Situated on the periphery of the convolutions and extend longitudinally in direction of rolling. (See Figure 7-10.)

4. METALLURGICAL ANALYSIS

The rough 'orange peel' effect of convolution cracks is the result of either a forming operation which stretches the material or from chemical attack such as pickling treatment. The roughened surface contains small pits which form stress risers. Subsequent service application (vibration and flexing) may introduce stresses that act on these pits and form fatigue cracks as shown in the accompanying photograph.

5. NDT METHODS APPLICATION AND LIMITATIONS

a. RADIOGRAPHIC TESTING METHOD

(1) Used extensively for this type of failure.

(2) Configuration of article and location of discontinuity limits detection almost exclusively to radiography.

(3) Orientation of convolutions to X-ray source is very critical since those discontinuities which are not normal to X-ray may not register on the film due to the lack of difference in density.

(4) Liquid penetrant and magnetic particle testing may supplement but not replace radiographic and ultrasonic testing.

(5) The type of marking material (e.g., grease pencil on titanium) used to identify the area of discontinuities may affect the structure of the article.

b. ULTRASONIC TESTING METHOD. Not normally used for the detection of convolution cracks. Configuration of the article (double-walled convolutions) and internal micro fractures are all factors which restrict the use of ultrasonics.

c. EDDY CURRENT TESTING METHOD. Not normally used for the detection of convolution cracks. As in the case of ultrasonic testing, the configuration does not lend itself to this method of testing.

d. LIQUID PENETRANT TESTING METHOD. Not recommended for the detection of convolution cracks. Although the discontinuities are surface, they are internal and are superimposed over an exterior shell which creates a serious problem of entrapment.

e. MAGNETIC TESTING METHOD. Not applicable. Material is nonferrous.

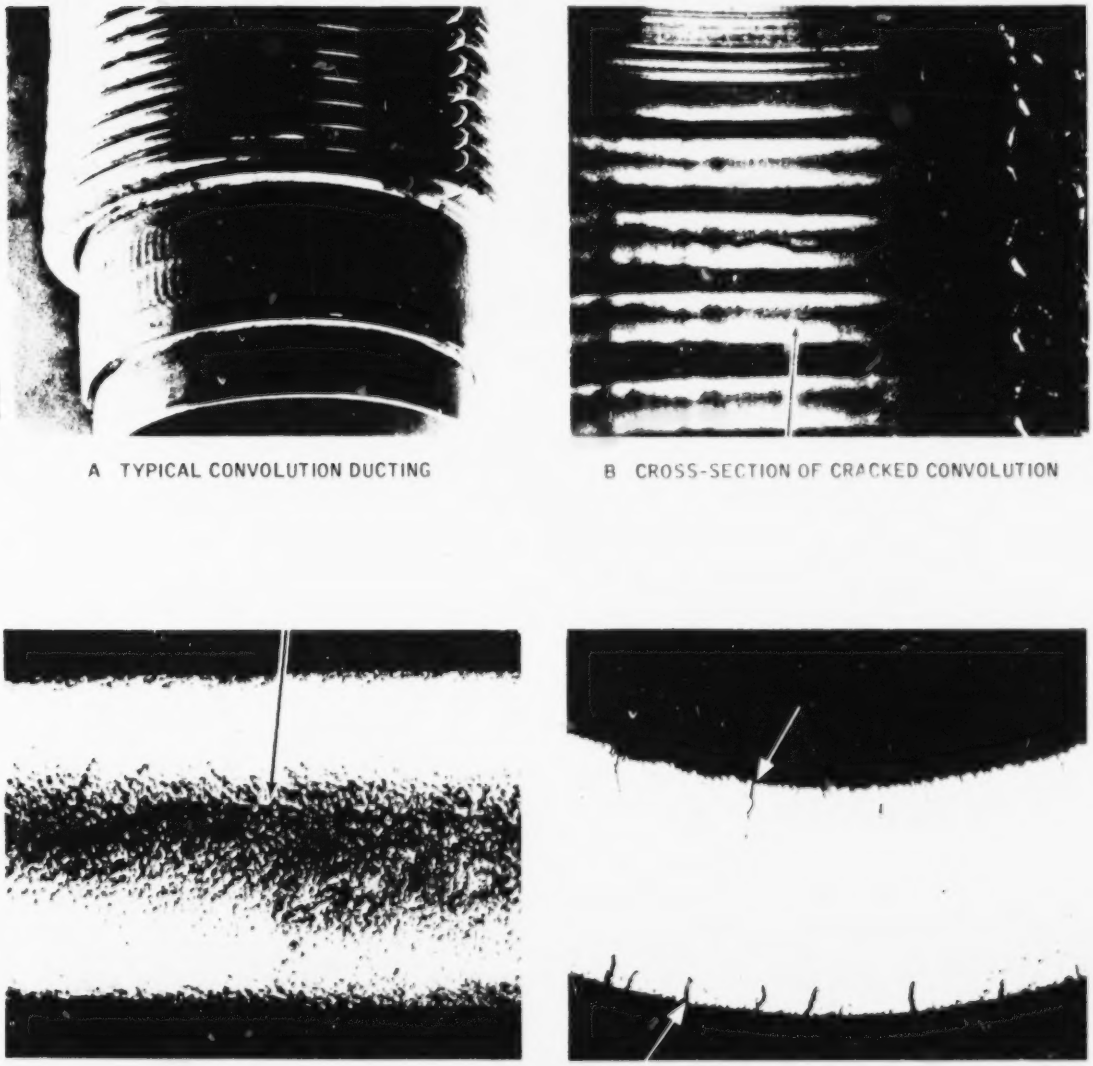

A TYPICAL CONVOLUTION DUCTING

B CROSS-SECTION OF CRACKED CONVOLUTION

C HIGHER MAGNIFICATION OF CRACK SHOWING ORANGE PEEL

D MICROGRAPH OF CONVOLUTION WITH PARTIAL CRACKING ON SIDES

Figure 7-10. Convolution Cracks Discontinuity

711 HEAT-AFFECTED ZONE CRACKING

1. CATEGORY. Processing (Weldments)

2. MATERIAL. Ferrous and Nonferrous

3. DISCONTINUITY CHARACTERISTICS

Surface. Often quite deep and very tight. Usually parallel with the weld in the heat-affect zone of the weldment. (See Figure 7-11.)

4. METALLURGICAL ANALYSIS

Hot cracking of heat-affected zones of weldments increases in severity with increasing carbon content. Steels that contain more than 0.30% carbon are prone to this type of failure and require preheating prior to welding.

5. NDT METHODS APPLICATION AND LIMITATIONS

a. MAGNETIC PARTICLE TESTING METHOD

(1) Normally used for ferrous weldments.

(2) Prod burns are very detrimental, especially on highly heat treated articles. May contribute to structural failure of article.

(3) Demagnetization of highly heat treated articles can be very difficult due to metallurgical structure.

b. LIQUID PENETRANT TESTING METHOD

(1) Normally used for nonferrous weldments.

(2) Material that has had its surface obliterated, blurred, or blended due to manufacturing processes should not be penetrant tested until the smeared surface has been removed.

(3) Liquid penetrant testing after the application of certain types of chemical film coatings may be invalid due to the covering or filling of the discontinuities.

c. RADIOGRAPHIC TESTING METHOD. Not normally used for the detection of heat-affected zone cracking. Discontinuity orientation and surface origin make other NDT methods more suitable.

d. ULTRASONIC TESTING METHOD

(1) Used where specialized applications have been developed.

(2) Rigid standards and procedures are required to develop valid tests.

(3) The configuration of the surface roughness (i.e., sharp versus rounded root radii and the slope condition) are major factors in deflecting the sound beam.

e. **EDDY CURRENT TESTING METHOD.** Not normally used for the detection of heat-affected zone cracking. Eddy current equipment has capability of detecting nonferrous surface discontinuities; however, it is not as universally used as magnetic particle or liquid penetrant.

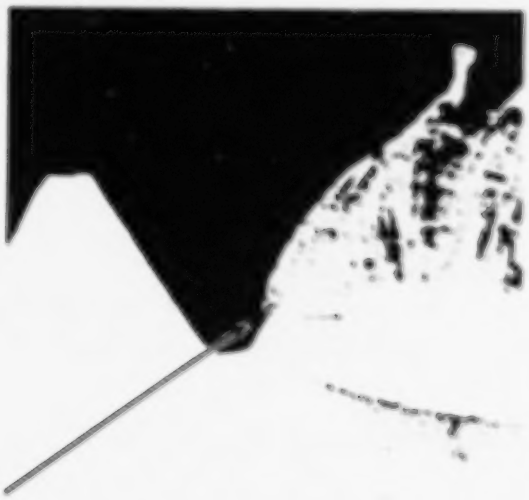

A MICROGRAPH OF WELD AND HEAT-AFFECTED ZONE SHOWING CRACK NOTE COLD LAP WHICH MASKS THE ENTRANCE TO THE CRACK

B MICROGRAPH OF CRACK SHOWN IN (A)

Figure 7-11. Heat-Affected Zone Cracking Discontinuity

712 HEAT TREAT CRACKS

1. CATEGORY. Processing

2. MATERIAL. Ferrous and Nonferrous Wrought and Cast Material

3. DISCONTINUITY CHARACTERISTICS

Surface. Usually deep and forked. Seldom follow a definite pattern and can be in any direction on the part. Originate in areas with rapid change of material thickness, sharp machining marks, fillets, nicks, and discontinuities which have been exposed to the surface of the material. (See Figure 7-12.)

4. METALLURGICAL ANALYSIS

During the heating and cooling process localized stresses may be set up by unequal heating or cooling, restricted movement of the article, or unequal cross-sectional thickness. These stresses may exceed the tensile strength of the material causing it to rupture. Where built-in stress risers occur (keyways or grooves) additional cracks may develop.

5. NDT METHODS APPLICATION AND LIMITATIONS

a. MAGNETIC PARTICLE TESTING METHOD

(1) For ferrous materials, heat treat cracks are normally detected by magnetic particles testing.

(2) The magnetic particles indications will normally be straight, forked, or curved indications.

(3) Likely points of origin are areas that would develop stress risers, such as keyways, fillets, or areas with rapid changes in material thickness.

(4) Metallurgical structure of age hardenable and heat treatable stainless steels (17.4, 17.7, and 431) may produce irrelevant indications.

b. LIQUID PENETRANT TESTING METHOD

(1) For nonferrous materials liquid penetrant testing is the recommended method.

(2) Likely points of origin would be the same as those listed above for magnetic particle testing.

(3) Materials or articles that will eventually be used in LOX systems must be tested with compatible penetrants.

c. EDDY CURRENT TESTING METHOD

(1) Normally not used.

(2) Magnetic particles and liquid penetrant are more direct and economical.

d. ULTRASONIC TESTING METHOD. Not normally used for detection of heat treat cracks. If used the scope pattern will show a definite indication of a discontinuity. Recommended wave mode would be surface.

e. RADIOGRAPHIC TESTING METHOD. Not normally used for detection of heat treat cracks. Surface discontinuities are more easily detected by other NDT methods designed for surface application.

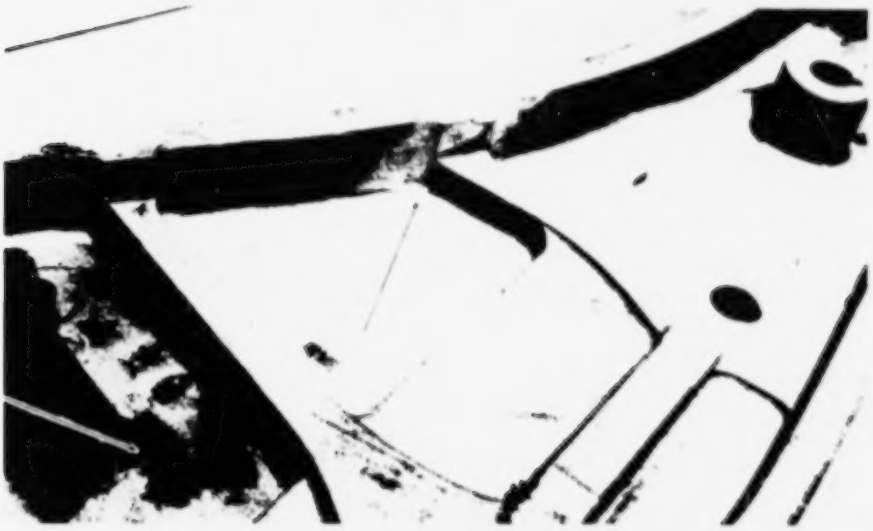

A FILLET AND MATERIAL THICKNESS CRACKS (TOP CENTER)
RELIEF RADIUS CRACKING (LOWER LEFT)

B HEAT TREAT CRACK DUE TO SHARP MACHINING MARKS

Figure 7-12. Heat Treat Cracks Discontinuity

713 SURFACE SHRINK CRACKS

1. CATEGORY. Processing (Welding)

2. MATERIAL. Ferrous and Nonferrous

3. DISCONTINUITY CHARACTERISTICS

Surface. Situated on the face of the weld, fusion zone, and base metal. Range in size from very small, tight, and shallow, to open and deep. Cracks may run parallel or transverse the direction of welding. (See Figure 7-13.)

4. METALLURGICAL ANALYSIS

Surface shrink cracks are generally the result of improper heat application, either in heating or welding of the article. Heating or cooling in a localized area may set up stresses that exceed the tensile strength of the material causing the material to crack. Restriction of the movement (contraction or expansion) of the material during heating, cooling, or welding may also set up excessive stresses.

5. NDT METHODS APPLICATION AND LIMITATIONS

a. LIQUID PENETRANT TESTING METHOD

(1) Surface shrink cracks are normally detected by liquid penetrant.

(2) Liquid penetrant equipment is easily portable and can be used during in-process control for both ferrous and nonferrous weldments.

(3) Assemblies which are joined by bolting, riveting, intermittent welding, or press fittings will retain the penetrant, which will seep out after developing and mask the adjoining surfaces.

(4) When articles are dried in a hot air dryer or by similar means, excessive drying temperature should be avoided to prevent evaporation of the penetrant.

b. MAGNETIC PARTICLE TESTING METHOD

(1) Ferrous weldments are normally tested by magnetic particle method.

(2) Surface discontinuities that are parallel to the magnetic field will not produce indications since they do not interrupt or distort the magnetic field.

(3) Areas of grease fittings, bearing races, or other similar items that might be damaged or clogged by the suspension solution or magnetic solids should be masked before testing.

c. EDDY CURRENT TESTING METHOD

(1) Normally confined to nonferrous welded pipe and tubing.

(2) Probe or encircling coil could be used where article configuration permits.

d. RADIOGRAPHIC TESTING METHOD. Not normally used for the detection of surface discontinuities. During the radiographic testing of weldments for other types of discontinuities, surface indications may be detected.

e. ULTRASONIC TESTING METHOD. Not normally used for detection of surface shrink cracks. Other forms of NDT (liquid penetrant and magnetic particle) give better results, are more economical, and are faster.

A TRANSVERSE CRACKS IN HEAT-AFFECTED ZONE

B TYPICAL STAR-SHAPED CRATER CRACK

C SHRINKAGE CRACK AT WELD TERMINAL

Figure 7-13. Surface Shrink Crack Discontinuity

714 THREAD CRACKS

1. CATEGORY. Service

2. MATERIAL. Ferrous and Nonferrous Wrought Material

3. DISCONTINUITY CHARACTERISTICS

Surface. Cracks are transverse to the grain (transgranular) starting at the root of the thread. (See Figure 7-14.)

4. METALLURGICAL ANALYSIS

Fatigue failures of this type are not uncommon. High cyclic stresses resulting from vibration and/or flexing act on the stress risers created by the thread roots and produce cracks. Fatigue cracks may start as fine submicroscopic discontinuities and/or cracks and propagate in the direction of applied stresses.

5. NDT METHODS APPLICATION AND LIMITATIONS

a. LIQUID PENETRANT TESTING METHOD

(1) Fluorescent penetrant is recommended over non-fluorescent.

(2) Low surface tension solvents such as gasoline and kerosene are not recommended cleaners.

(3) When applying liquid penetrant to components within an assembly or structure, the adjacent areas should be effectively masked to prevent overspraying.

b. MAGNETIC PARTICLE TESTING METHOD

(1) Normally used on ferrous materials.

(2) Irrelevent magnetic indications may result from the thread configuration.

(3) Cleaning titanium and 440C stainless in halogeneated hydrocarbons may result in structural damage to the material.

c. EDDY CURRENT TESTING METHOD. Not normally used for detecting thread cracks. The article configuration would require specialized equipment if adaptable.

d. ULTRASONIC TESTING METHOD. Not recommended for detecting thread cracks. Thread configuration does not lend itself to ultrasonic testing.

e. RADIOGRAPHIC TESTING METHOD. Not recommended for detecting thread cracks. Surface discontinuities are best screened by NDT method designed for the specific condition. Fatigue cracks of this type are very tight and surface connected, their detection by radiography would be extremely difficult.

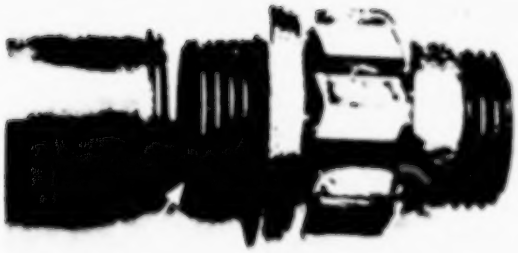

A COMPLETE THREAD ROOT FAILURE

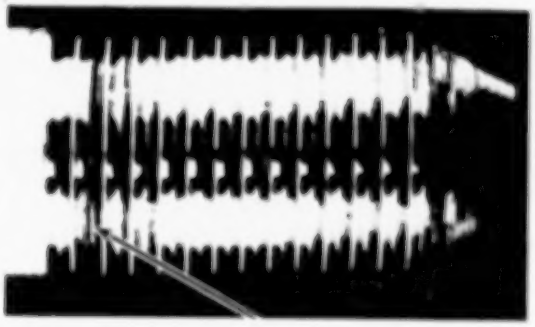

B TYPICAL THREAD ROOT FAILURE

C MICROGRAPH OF (A) SHOWING CRACK AT BASE OF ROOT

D MICROGRAPH OF (B) SHOWING TRANSGRANULAR CRACK AT THREAD ROOT

Figure 7-14. Thread Crack Discontinuity

715 TUBING CRACKS (INCONEL "X")

1. CATEGORY. Inherent

2. MATERIAL. Nonferrous

3. DISCONTINUITY CHARACTERISTICS

Tubing cracks formed on the inner surface (I.D.), parallel to direction of grain flow. (See Figure 7-15.)

4. METALLURGICAL ANALYSIS

Tubing I. D. cracks may be attributed to one or a combination of the following:

a. Improper cold reduction of the tube during fabrication.

b. Foreign material may have been embedded on the inner surface of the tubes causing embrittlement and cracking when the cold worked material was heated during the annealing operation.

c. Insufficient heating rate to the annealing temperature with possible cracking occurring in the 1200-1400° F range.

5. NDT METHODS APPLICATION AND LIMITATIONS

a. EDDY CURRENT TESTING METHOD

(1) Normally used for detection of this type of discontinuity.

(2) The diameter (1 inch) and wall thickness (0.156 inch) are well within equipment capability.

(3) Testing of ferro-magnetic material may be difficult.

b. ULTRASONIC TESTING METHOD

(1) Normally used on heavy gauge tubing.

(2) A wide variety of equipment and transducers are available for screening tubing for internal discontinuities of this type.

(3) Ultrasonic transducers have varying temperature limitations.

(4) Certain ultrasonic contact couplants may have high sulfur content which will have an adverse effect on high nickel alloys.

c. RADIOGRAPHIC TESTING METHOD

(1) Not normally used for detecting tubing cracks.

(2) Discontinuity orientation and thickness of material govern the radiographic sensitivity.

(3) Other forms of NDT (eddy current and ultrasonic) are more economical, faster, and reliable.

d. LIQUID PENETRANT TESTING METHOD. Not recommended for detecting tubing cracks. Internal discontinuity would be difficult to process and interpret.

e. MAGNETIC PARTICLES TESTING METHOD. Not applicable. Material is nonferrous under normal conditions.

A TYPICAL CRACK ON INSIDE OF TUBING SHOWING COLD LAP

B ANOTHER PORTION OF SAME CRACK SHOWING CLEAN FRACTURE

C MICROGRAPH OF (B)

Figure 7-15. Tubing Crack Discontinuity

716 HYDROGEN FLAKE

1. CATEGORY. Processing

2. MATERIAL. Ferrous

3. DISCONTINUITY CHARACTERISTICS

Internal fissures in a fractured surface, flakes appear as bright silvery areas. On an etched surface they appear as short discontinuities. Sometimes known as chrome checks and hairline cracks when revealed by machining, flakes are extremely thin and generally aligned parallel with the grain. They are usually found in heavy steel forgings, billets, and bars. (See Figure 7-16.)

4. METALLURGICAL ANALYSIS

Flakes are internal fissures attributed to stresses produced by localized transformation and decreased solubility of hydrogen during cooling after hot working. Usually found only in heavy alloy steel forgings.

5. NDT METHODS APPLICATION AND LIMITATIONS

a. ULTRASONIC TESTING METHOD

(1) Used extensively for the detection of hydrogen flake.

(2) Material in the wrought condition can be screened successfully using either the immersion or the contact method. The surface condition will determine the method most suited.

(3) On the A-scan presentation, hydrogen flake will appear as hash on the screen or as loss of back reflection.

(4) All foreign materials (loose scale, dirt, oil, grease) should be removed prior to any testing. Surface irregularities such as nicks, gouges, tool marks, and scarfing may cause loss of back reflection.

b. MAGNETIC PARTICLE TESTING METHOD

(1) Normally used on finished machined articles.

(2) Flakes appear as short discontinuities and resemble chrome checks or hairline cracks.

(3) Machined surfaces with deep tool marks may obliterate the detection of the flake.

(4) Where the general direction of a discontinuity is questionable, it may be necessary to magnetize in two or more directions.

c. LIQUID PENETRANT TESTING METHOD. Not normally used for detecting flakes. Discontinuities are very small and tight and would be difficult to detect by liquid penetrant.

d. EDDY CURRENT TESTING METHOD. Not recommended for detecting flakes. The metallurgical structure of ferrous materials limits their adaptability to the use of eddy current.

e. RADIOGRAPHIC TESTING METHOD. Not recommended for detecting flakes. The size of the discontinuity, its location and orientation with respect to the material surface restricts the application of radiography.

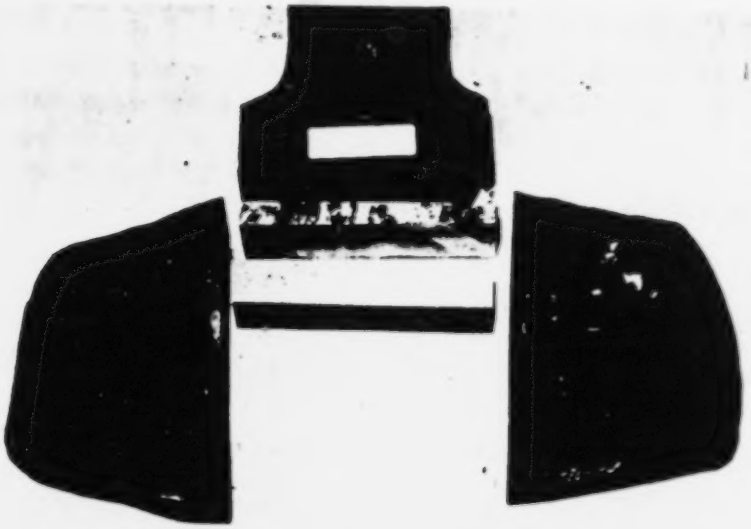

A 4340 CMS HAND FORGING REJECTED FOR HYDROGEN FLAKE

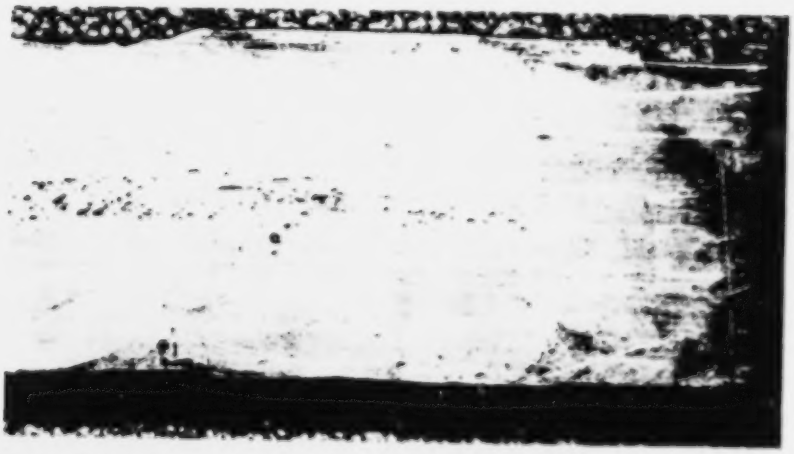

B CROSS-SECTION OF (A) SHOWING FLAKE CONDITION IN CENTER OF MATERIAL

Figure 7-16. Hydrogen Flake Discontinuity

717 HYDROGEN EMBRITTLEMENT

1. CATEGORY. Processing and Service

2. MATERIAL. Ferrous

3. DISCONTINUITY CHARACTERISTICS

Surface. Small, nondimensional (interface) with no orientation or direction. Found in highly heat treated material that was subjected to pickling and/or plating or in material exposed to free hydrogen. (See Figure 7-17.)

4. METALLURGICAL ANALYSIS

Operations such as pickling and cleaning prior to electroplating or electroplating generate hydrogen at the surface of the material. This hydrogen penetrates the surface of the material creating immediate or delayed embrittlement and cracking.

5. NDT METHODS APPLICATION AND LIMITATIONS

a. MAGNETIC PARTICLES TESTING METHOD

(1) Magnetic indications appear as a fractured pattern.

(2) Hydrogen embrittlement cracks are randomly orientated and may follow the magnetic field.

(3) Magnetic particle testing should be accomplished before and after plating.

(4) Care should be taken to produce no confusing or irrelevant indications or cause damage to the article by overheating.

(5) 301 corrosion resistant steel is non-magnetic in the annealed condition, but becomes magnetic with cold working.

b. LIQUID PENETRANT TESTING METHOD

(1) Not normally used for detecting hydrogen embrittlement.

(2) Discontinuities on the surface are extremely tight, small, and difficult to detect. Subsequent plating deposit may mask the discontinuity.

c. ULTRASONIC TESTING METHOD

(1) Not normally used for detecting hydrogen embrittlement.

(2) Article configurations and size do not, in general, lend themselves to this method of testing.

(3) Equipment has capability of detecting hydrogen embrittlement. Recommend surface wave technique.

d. EDDY CURRENT TESTING METHOD. Not recommended for detecting hydrogen embrittlement. Many variables inherent in the specific material may produce conflicting patterns.

e. RADIOGRAPHIC TESTING METHOD. Not recommended for detecting hydrogen embrittlement. The sensitivity required to detect hydrogen embrittlement is in most cases in excess of radiographic capabilities.

A DETAILED CRACK PATTERN OF HYDROGEN EMBRITTLEMENT

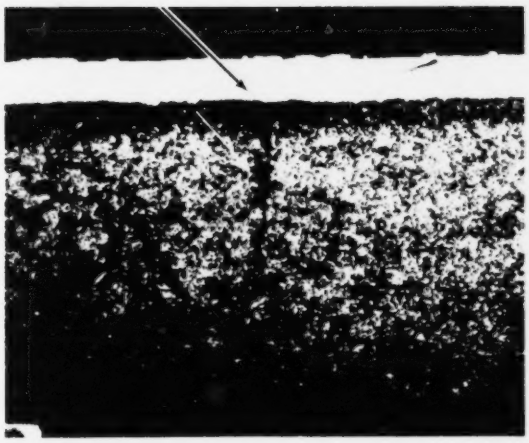

B HYDROGEN EMBRITTLEMENT UNDER CHROME PLATE

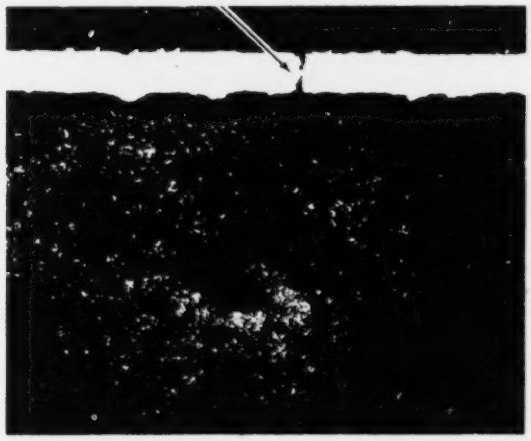

C HYDROGEN EMBRITTLEMENT PROPAGATED THROUGH CHROME PLATE

Figure 7-17. Hydrogen Embrittlement Discontinuity

718 INCLUSIONS

1. CATEGORY. Processing (Weldments)

2. MATERIAL. Ferrous and Nonferrous Welded Material

3. DISCONTINUITY CHARACTERISTICS

Surface and subsurface. Inclusions may be any shape. They may be metallic or non-metallic and may appear singly or be linearly distributed or scattered throughout the weldment. (See Figure 7-18.)

4. METALLURGICAL ANALYSIS

Metallic inclusions are generally particles of metals of different density as compared to the weld or base metal. Non-metallic inclusions are oxides, sulphides, slag or other non-metallic foreign material entrapped in the weld or between the weld metal and the base metal.

5. NDT METHODS APPLICATION AND LIMITATIONS

a. RADIOGRAPHIC TESTING METHOD

(1) This NDT method is universally used.

(2) Metallic inclusions appear on the radiograph as sharply defined, round, erratically shaped, or elongated white spots and may be isolated or in small linear or scattered groups.

(3) Non-metallic inclusions will appear on the radiograph as shadows of round globules or elongated or irregularly shaped contours occurring singly, linearly, or scattered throughout the weldment. They will generally appear in the fusion zone or at the root of the weld. Less absorbent material is indicated by a greater film density and more absorbent materials by a lighter film density.

(4) Foreign material such as loose scales, splatter, or flux may invalid test results.

b. EDDY CURRENT TESTING METHOD

(1) Normally confined to thin wall welded tubing.

(2) Established standards may be required if valid results are to be obtained.

c. MAGNETIC PARTICLE TESTING METHOD

(1) Normally not used for detecting inclusions in weldments.

(2) Confined to machined weldments where the discontinuities are surface or near surface.

(3) The indications would appear jagged, irregularly shaped, individually or clustered, and would not be too pronounced.

(4) Discontinuities may go undetected when improper contact exists between the magnetic particles and the surface of the article.

d. ULTRASONIC TESTING METHOD

(1) Not normally used for detecting inclusions.

(2) Specific applications of design or of article configuration may require ultrasonic testing.

e. LIQUID PENETRANT TESTING METHOD. Not applicable. Inclusions are normally not open fissures.

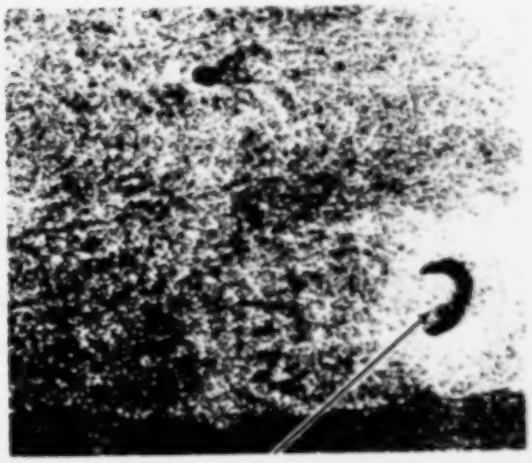

A METALLIC INCLUSIONS

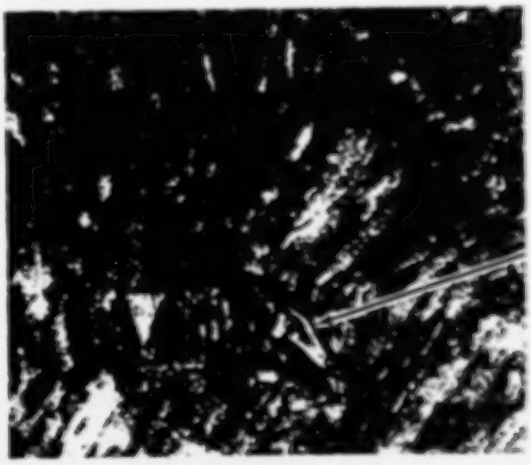

B INCLUSIONS TRAPPED IN WELD

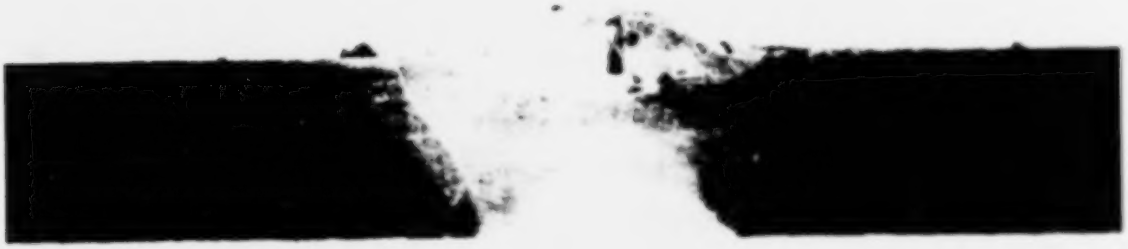

C CROSS-SECTION OF WELD SHOWING INTERNAL INCLUSIONS

Figure 7-18. Weldment Inclusion Discontinuity

719 INCLUSIONS

1. CATEGORY. Processing

2. MATERIAL. Ferrous and Nonferrous Wrought Material

3. DISCONTINUITY CHARACTERISTICS

Subsurface (original bar) or surface (after machining). There are two types: one is non-metallic with long straight lines parallel to flow lines and quite tightly adherent. Often short and likely to occur in groups. The other type is non-plastic, appearing as a comparatively large mass and not parallel to flow lines. Found in forged, extruded, and rolled material. (See Figure 7-19.)

4. METALLURGICAL ANALYSIS

Non-metallic inclusions (stringers) are caused by the existence of slag or oxides in the billet or ingot. Non-plastic inclusions are caused by particles remaining in the solid state during billet melting.

5. NDT METHODS APPLICATIONS AND LIMITATIONS

a. ULTRASONIC TESTING METHOD

(1) Normally used to evaluate inclusions in wrought material.

(2) Inclusions will appear as definite interfaces within the metal. Small clustered condition or conditions on different planes causing a loss in back reflection. Numerous small scattered conditions cause excessive "noise".

(3) Inclusion orientation in relationship to ultrasonic beam is critical.

(4) The direction of the ultrasonic beam should be perpendicular to the direction of the grain flow whenever possible.

b. EDDY CURRENT TESTING METHOD

(1) Normally used for thin wall tubing and small diameter rods.

(2) Testing of ferro-magnetic materials can be difficult.

c. MAGNETIC PARTICLE TESTING METHOD

(1) Normally used on machined surface.

(2) Inclusions will appear as a straight intermittent or as a continuous indication. They may be individual or clustered.

(3) The magnetic technique should be such that a surface or near surface inclusion can be satisfactorily detected when its axis is in any direction.

(4) A knowledge of the grain flow of the material is critical since inclusions will be parallel to that direction.

(5) Certain types of steels are more prone to inclusions than other.

d. LIQUID PENETRANT TESTING METHOD

(1) Not normally used for detecting inclusions in wrought material.

(2) Inclusions are generally not openings in the material surface.

e. RADIOGRAPHIC TESTING METHOD. Not recommended. NDT methods designed for surface testing are more suitable for detecting surface inclusions.

A TYPICAL INCLUSION PATTERN ON MACHINED SURFACES

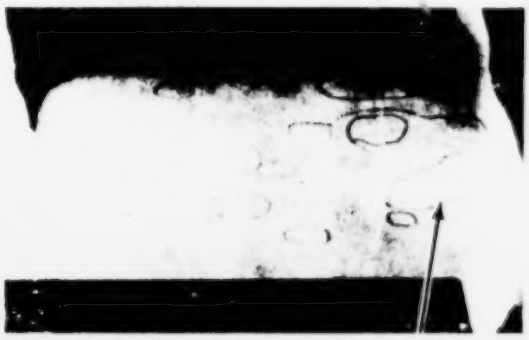

B STEEL FORGING SHOWING NUMEROUS INCLUSIONS

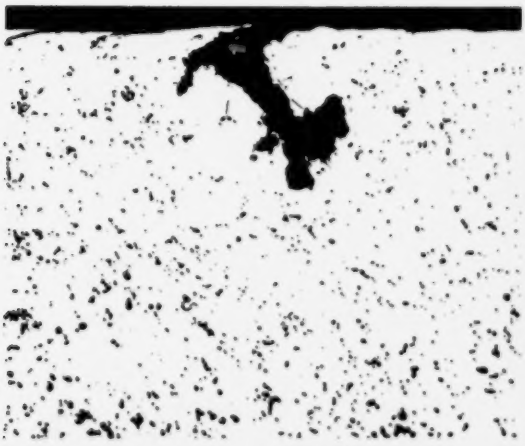

C MICROGRAPH OF TYPICAL INCLUSION

D LONGITUDINAL CROSS-SECTION SHOWING ORIENTATION OF INCLUSIONS

Figure 7-19. Wrought Inclusion Discontinuity

720 LACK OF PENETRATION

1. CATEGORY. Processing

2. MATERIAL. Ferrous and Nonferrous Weldments

3. DISCONTINUITY CHARACTERISTICS

Internal or external. Generally irregular and filamentary occuring at the root and running parallel with the weld. (See Figure 7-20.)

4. METALLURGICAL ANALYSIS

Caused by root face of joint not reaching fusion temperature before weld metal was deposited. Also caused by fast welding rate, too large a welding rod, or too cold a bead.

5. NDT METHODS APPLICATION AND LIMITATIONS

a. RADIOGRAPHIC TESTING METHOD

(1) Used extensively on a wide variety of welded articles to determine the lack of penetration.

(2) Lack of penetration will appear on the radiograph as an elongated dark area of varying length and width. It may be continuous or intermittent and may appear in the center of the weld at the junction of multipass bends.

(3) Lack of penetration orientation in relationship to the radiographic source is critical.

(4) Sensitivity levels govern the capability to detect small or tight discontinuities.

b. ULTRASONIC TESTING METHOD

(1) Commonly used for specific applications.

(2) Complex weld configurations or thin wall weldments do not lend themselves to ultrasonic testing.

(3) Lack of penetration will appear on the scope as a definite break or discontinuity resembling a crack and will give a very sharp reflection.

(4) Repeatability of ultrasonic test results is difficult unless equipment is standardized.

c. EDDY CURRENT TESTING METHOD

(1) Normally used to determine lack of penetration in nonferrous welded pipe and tubing.

(2) Eddy current can be used where other nonferrous articles can meet the configuration requirement of the equipment.

d. MAGNETIC PARTICLE TESTING METHOD

(1) Normally used where backside of weld is visible.

(2) Lack of penetration appears as an irregular indication of varying width.

e. LIQUID PENETRANT TESTING METHOD

(1) Normally used where backside of weld is visible.

(2) Lack of penetration appears as an irregular indication of varying width.

(3) Residue left by the penetrant and the developer could contaminate any re-welding operation.

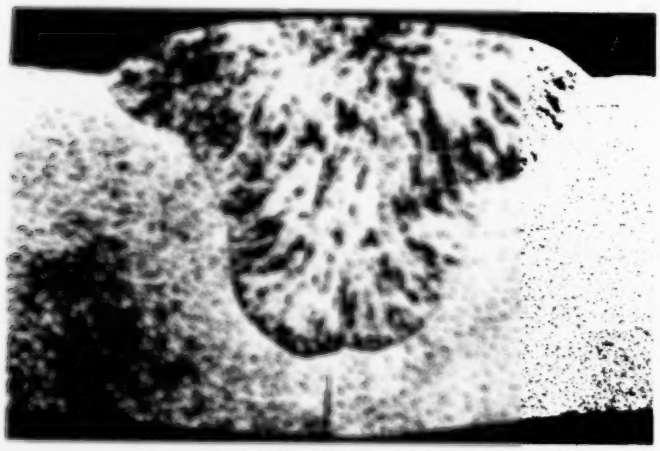

A INADEQUATE ROOT PENETRATION

B INADEQUATE ROOT PENETRATION OF BUTT WELDED TUBE

C INADEQUATE FILLET WELD PENETRATION KNOWN AS BRIDGING

Figure 7-20. Lack of Penetration Discontinuity

721 LAMINATIONS

1. CATEGORY. Inherent

2. MATERIAL. Ferrous and Nonferrous Wrought Material

3. DISCONTINUITY CHARACTERISTICS

Surface and internal. Flat, extremely thin, generally aligned parallel to the work surface of the material. May contain a thin film of oxide between the surfaces. Found in forged, extruded, and rolled material. (See Figure 7-21.)

4. METALLURGICAL ANALYSIS

Laminations are separations or weaknesses generally aligned parallel to the work surface of the material. They may be the result of pipe, blister, seam, inclusions, or segregations elongated and made directional by working. Laminations are flattened impurities that are extremely thin.

5. NDT METHODS APPLICATION AND LIMITATIONS

a. ULTRASONIC TESTING METHOD

(1) For heavier gauge material the geometry and orientation of lamination (normal to the beam) makes their detection limited to ultrasonic.

(2) Numerous wave modes may be used depending upon the material thickness or method selected for testing. Automatic and manual contact or immersion methods are adaptable.

(3) Lamination will appear as a definite interface with a loss of back reflection.

(4) Through transmission and reflection techniques are applicable for very thin sections.

b. MAGNETIC PARTICLE TESTING METHOD

(1) Articles fabricated from ferrous materials are normally tested for lamination by magnetic particle.

(2) Magnetic indication will appear as a straight, intermittent indication.

(3) Magnetic particle testing is not capable of determining the over-all size or depth of the lamination.

c. LIQUID PENETRANT TESTING METHOD

(1) Normally used on nonferrous materials.

(2) Machining, honing, lapping, or blasting may smear surface of material and thereby close or mask surface lamination.

(3) Acid and alkalines seriously limit the effectiveness of liquid penetrant testing. Thorough cleaning of the surface is essential.

d. EDDY CURRENT TESTING METHOD. Not normally used to detect laminations. If used, the method must be confined to thin sheet stock.

e. RADIOGRAPHIC TESTING METHOD. Not recommended for detecting laminations Laminations have very small thickness changes in the direction of the X-ray beam, thereby making radiographic detection almost impossible.

A LAMINATION IN 0.250 IN. PLATE

B LAMINATION IN 0.040 TITANIUM SHEET

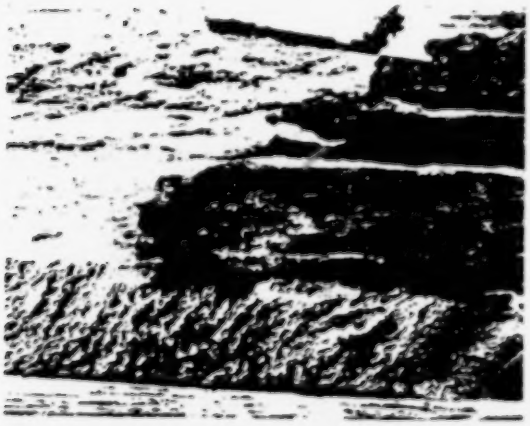

C LAMINATION IN PLATE SHOWING SURFACE ORIENTATION

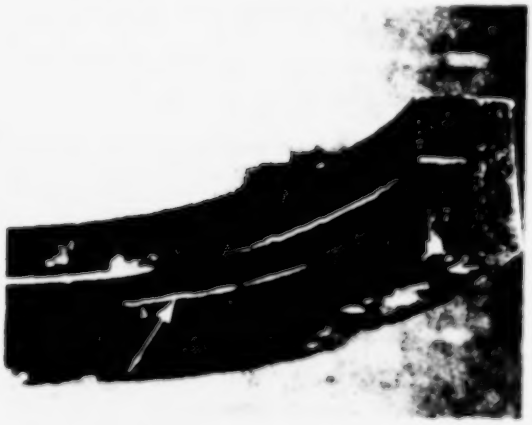

D LAMINATION IN 1 IN. BAR SHOWING SURFACE ORIENTATION

Figure 7-21. Lamination Discontinuity

722 LAPS AND SEAMS

1. CATEGORY. Processing

2. MATERIAL. Ferrous and Nonferrous Rolled Threads

3. DISCONTINUITY CHARACTEPISTICS

Surface. Wavy lines, often quite deep and sometime very tight, appearing as hairline cracks. Found in rolled threads in the minor, pitch, and major diameter of the thread, and in direction of rolling. (See Figure 7-22.)

4. METALLURGICAL ANALYSIS

During the rolling operation, faulty or oversized dies or an overfill of material may cause material to be folded over and flattened into the surface of the thread but not fused.

5. NDT METHODS APPLICATION AND LIMITATIONS

a. LIQUID PENETRANT TESTING METHOD

(1) Compatibility with both ferrous and nonferrous materials makes fluorescent liquid penetrant the first choice.

(2) Liquid penetrant indications will be circumferential, slightly curved, intermittent or continuous indications. Laps and seams may occur individually or in clusters.

(3) Foreign material may not only interfere with the penetration of the penetrant into the discontinuity but may cause an accumulation of penetrant in a nondefective area.

(4) Surface of threads may be smeared due to rolling operation, thereby sealing off laps and seams.

(5) Fluorescent and dye penetrants are not compatible. Dye penetrants tend to kill the fluorescent qualities in fluorescent penetrants.

b. MAGNETIC PARTICLE TESTING METHOD

(1) Magnetic particle indications would generally appear the same as liquid penetrant.

(2) Irrelevent magnetic indications may result from the thread configuration.

(3) Questionable magnetic particles indications can be verified by liquid penetrant testing.

c. EDDY CURRENT TESTING METHOD. Not normally used for detecting laps and seams. Article configuration is the restricting factor.

d. ULTRASONIC TESTING METHOD. Not recommended for detecting laps and seams. Thread configurations restrict ultrasonic capability.

e. RADIOGRAPHIC TESTING METHOD. Not recommended for detecting laps and seams. Size and orientation of discontinuities restricts the capability of radiographic testing.

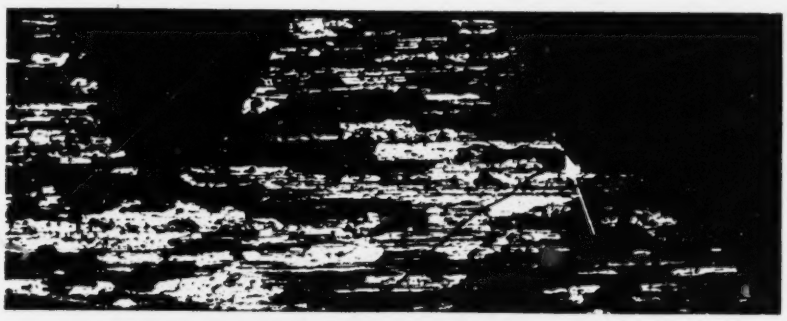

A TYPICAL AREAS OF FAILURE LAPS AND SEAMS

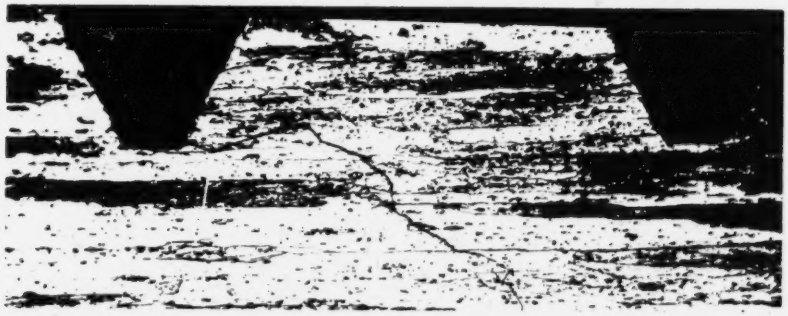

B FAILURE OCCURRING AT ROOT OF THREAD

C AREAS WHERE LAPS AND SEAMS USUALLY OCCUR

Figure 7-22. Laps and Seams Discontinuity in Rolled Threads

723 LAPS AND SEAMS

1. CATEGORY. Processing

2. MATERIAL. Ferrous and Nonferrous Wrought Material

3. DISCONTINUITY CHARACTERISTICS

   a. Lap Surface. Wavy lines usually not very pronounced or tightly adherent since they usually enter the surface at a small angle. Laps may have surface openings smeared closed. Found in wrought forgings, plate, tubing, bar, and rod. (See Figure 7-23.)

   b. Seam Surface. Lengthy, often quite deep and sometimes very tight, usually parallel fissures with the grain and at times spiral when associated with rolled rod and tubing.

4. METALLURGICAL ANALYSIS

Seams originate from blowholes, cracks, splits, and tears introduced in earlier processing and elongated in the direction of rolling or forging. The distance between adjacent innerfaces of the discontinuity is very small.

Laps are similar to seams and may result from improper rolling, forging, or sizing operations. During the processing of the material, corners may be folded over or an overfill may exist during the sizing resulting in material being flattened into the surface but not fused. Laps may occur on any part of the article.

5. NDT METHODS APPLICATION AND LIMITATIONS

   a. MAGNETIC PARTICLE TESTING METHOD

      (1) Magnetic particle is recommended for ferrous material.

      (2) Surface and near-surface laps and seams may be detected by this method.

      (3) Laps and seams may appear as a straight, spiral, or slightly curved indication. They may be individual or clustered and continuous or intermittent.

      (4) Magnetic buildup of laps and seams is very small. Therefore, a magnetizing current greater than that used for the detection of a crack is necessary.

      (5) Correct magnetizing technique should be used when examining for forging laps since the discontinuity may lie in a plane nearly parallel to the surface.

b. LIQUID PENETRANT TESTING METHOD

(1) Liquid penetrant is recommended for nonferrous material.

(2) Laps and seams may be very tight and difficult to detect especially by liquid penetrant.

(3) Liquid penetrant testing of laps and seams can be increased slightly by heating the article before applying the penetrant.

c. ULTRASONIC TESTING METHOD

(1) Normally used to test wrought material prior to machining.

(2) Surface wave technique permits accurate evaluation of the depth, length, and size of laps and seams.

(3) Ultrasonic indication of laps and seams will appear as definite inner faces within the metal.

d. EDDY CURRENT TESTING METHOD

(1) Normally used for the evaluation of laps and seams in tubing and pipe.

(2) Other articles can be screened by eddy current where article configuration and size permit.

e. RADIOGRAPHIC TESTING METHOD. Not recommended for detecting laps and seams in wrought material. The ratio between the discontinuity size and the material thickness exceed 2% of sensitivity in most cases.

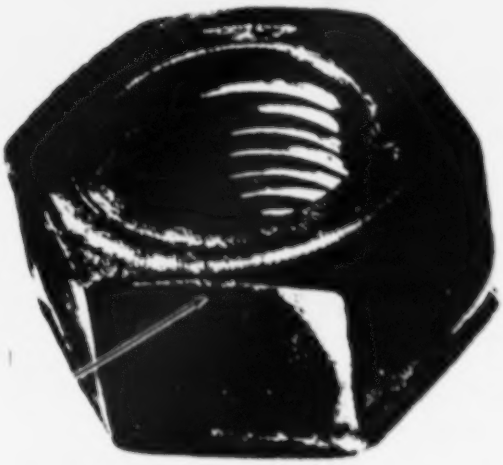

A TYPICAL FORGING LAP

B MICROGRAPH OF A LAP

Figure 7-23. Laps and Seams Discontinuity in Wrought Material

724 MICRO-SHRINKAGE

1. CATEGORY. Processing

2. MATERIAL. Magnesium Casting

3. DISCONTINUITY CHARACTERISTICS

Internal. Small filamentary voids in the grain boundaries appear as concentrated porosity in cross section. (See Figure 7-24.)

4. METALLURGICAL ANALYSIS

Shrinkage occurs while the metal is in a plastic or semi-molten state. If sufficient molten metal cannot flow into different areas as it cools, the shrinkage will leave a void. The void is identified by its appearance and by the time in the plastic range it occurs. Micro-shrinkage is caused by the withdrawal of the low melting point constituent from the grain boundaries.

5. NDT METHODS APPLICATION AND LIMITATIONS

a. RADIOGRAPHIC TESTING METHOD

(1) Radiography is universally used to determine the acceptance level of micro-shrinkage.

(2) Micro-shrinkage will appear on the radiograph as an elongated swirl resembling feathery streaks or as dark irregular patches, which are indicative of cavities in the grain boundaries.

b. LIQUID PENETRANT TESTING METHOD

(1) Normally used on finished machined surfaces.

(2) Micro-shrinkage is not normally open to the surface. These conditions will, therefore, be detected in machined areas.

(3) The appearance of the indication depends on the plane through which the condition has been cut. The appearance varies from a continuous hairline to a massive porous indication.

(4) Penetrant may act as a contaminant by saturating the micro porous casting affecting their ability to accept a surface treatment.

(5) Serious structural and a dimensional damage to the article can result from the improper use of acids or alkalies. They should never be used unless approval is obtained.

c. EDDY CURRENT TESTING METHOD. Not recommended for detecting micro-shrinkage. Article configuration and type of discontinuity do not lend themselves to eddy current.

d. ULTRASONIC TESTING METHOD. Not recommended for detecting micro-shrinkage. Cast structure and article configuration are restricting factors.

e. MAGNETIC PARTICLE TESTING METHOD. Not applicable. Material is nonferrous.

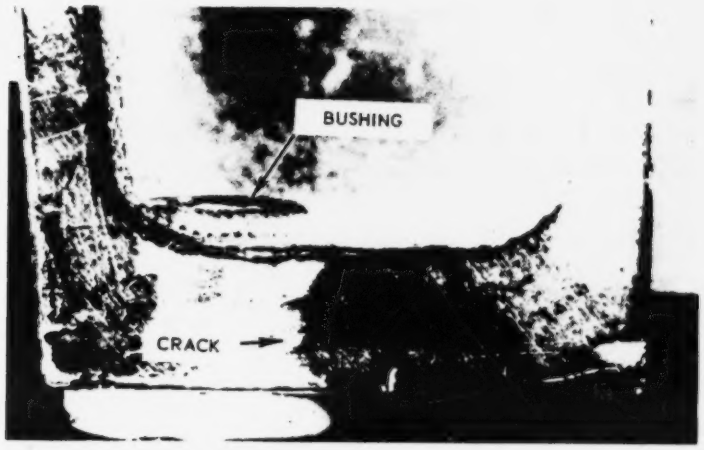

A CRACKED MAGNESIUM HOUSING

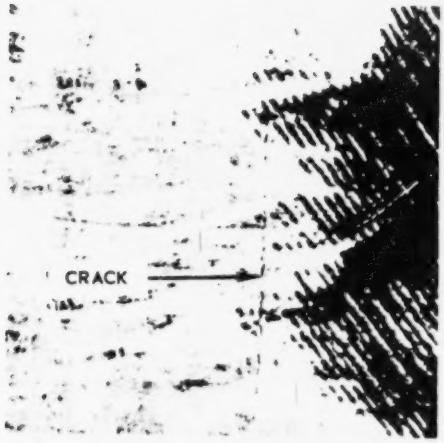

B CLOSE-UP VIEW OF (A)

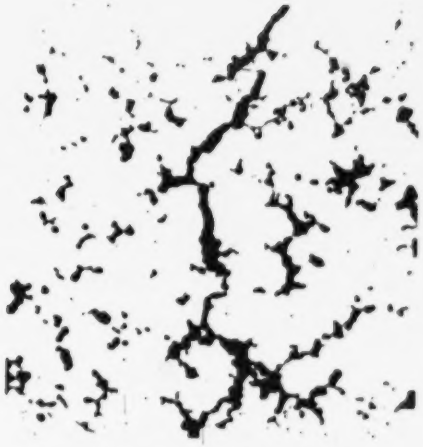

C MICROGRAPH OF CRACKED AREA

Figure 7-24. Micro-Shrinkage Discontinuity

725 GAS POROSITY

1. CATEGORY. Processing

2. MATERIAL. Ferrous and Nonferrous Weldments

3. DISCONTINUITY CHARACTERISTICS

Surface or subsurface. Rounded or elongated, teardrop shaped with or without a sharp discontinuity at the point. Scattered uniformly throughout the weld or isolated in small groups. May also be concentrated at the root or toe. (See Figure 7-25.)

4. METALLURGICAL ANALYSIS

Porosity in welds is caused by gas entrapment in the molten metal, too much moisture on the base or filler metal, or improper cleaning or preheating.

5. NDT METHODS APPLICATION AND LIMITATIONS

a. RADIOGRAPHY TESTING METHOD

(1) Radiography is the most universally used NDT method for the detection of gas porosity in weldments.

(2) The radiographic image of a 'round' porosity will appear as oval shaped spots with smooth edges, while 'elongated' porosity will appear as oval shaped spots with the major axis sometimes several times longer than the minor axis.

(3) Foreign material such as loose scale, flux, or splatter will affect validity of test results.

b. ULTRASONIC TESTING METHOD

(1) Ultrasonic testing equipment is highly sensitive, capable of detecting micro-separations. Established standards should be used if valid test results are to be obtained.

(2) Surface finish and grain size will affect the validity of the test results.

c. EDDY CURRENT TESTING METHOD

(1) Normally confined to thin wall welded pipe and tube.

(2) Penetration restricts testing to a depth of more than one-quarter inch.

d. LIQUID PENETRANT TESTING METHOD

(1) Normally confined to in-process control of ferrous and nonferrous weldments.

(2) Liquid penetrant testing, like magnetic particle, is restricted to surface evaluation.

(3) Extreme caution must be exercised to prevent any cleaning material, magnetic (iron oxide), and liquid penetrant materials from becoming entrapped and contaminating the rewelding operation.

e. MAGNETIC PARTICLE TESTING METHOD

(1) Not normally used to detect gas porosity.

(2) Only surface porosity would be evident. Near surface porosity would not be clearly defined since it is neither strong or pronounced.

A TYPICAL SURFACE POROSITY

B CROSS-SECTION OF (A) SHOWING EXTENT OF POROSITY

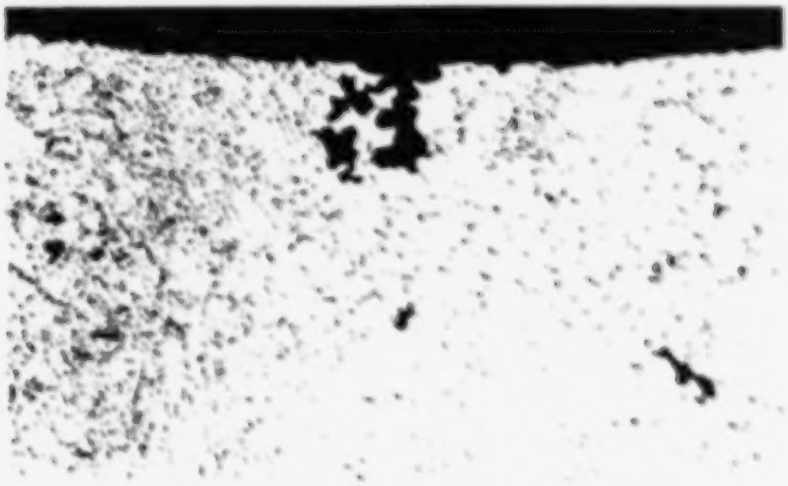

C MICROGRAPH OF CROSS-SECTION SHOWING TYPICAL SHRINKAGE POROSITY

Figure 7-23. Gas Porosity Discontinuity

726 UNFUSED POROSITY

1. CATEGORY. Processing

2. MATERIAL. Aluminum

3. DISCONTINUITY CHARACTERISTICS

Internal. Wafer-thin fissures aligned parallel with the grain flow. Found in wrought aluminum which is rolled, forged, or extruded. (See Figure 7-26.)

4. METALLURGICAL ANALYSIS

Unfused porosity is attributed to porosity which is in the cast ingot. During the rolling, forging, or extruding operations it is flattened into wafer-thin shape. If the internal surface of these discontinuities is oxidized or is composed of a foreign material, they will not fuse during the subsequent processing, resulting in an extremely thin interface or void.

5. NDT METHODS APPLICATION AND LIMITATIONS

a. ULTRASONIC TESTING METHOD

(1) Used extensively for the detection of unfused porosity.

(2) Material may be tested in the wrought as received configuration.

(3) Ultrasonic testing fixes the location of the void in all three directions.

(4) Where the general direction of the discontinuity is unknown, it may be necessary to test from several directions.

(5) Method of manufacture and subsequent article configuration will determine the orientation of the unfused porosity to the material surface.

b. LIQUID PENETRANT TESTING METHOD

(1) Normally used on nonferrous machined articles.

(2) Unfused porosity will appear as a straight line of varying lengths running parallel with the grain. Liquid penetrant is restricted to surface evaluation.

(3) Surface preparations such as vapor blasting, honing, or sanding may obliterate by masking the surface discontinuities, thereby restricting the reliability of liquid penetrant testing.

(4) Excessive agitation of powder in a large container may produce foaming.

c. EDDY CURRENT TESTING METHOD. Not normally used for detecting unfused porosity.

d. RADIOGRAPHIC TESTING METHOD

(1) Not normally used for detecting unfused porosity.

(2) Wafer-thin discontinuities are difficult to detect by a method which measures density or which requires that the discontinuity be parallel and perpendicular to the X-ray beam.

e. MAGNETIC PARTICLE TESTING METHOD. Not applicable. Material is nonferrous.

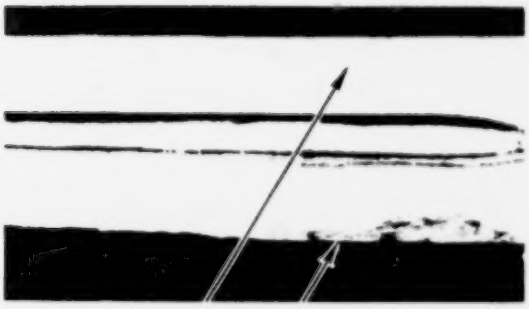

A FRACTURED SPECIMEN SHOWING UNFUSED POROSITY

B UNFUSED POROSITY EQUIVALENT TO 1/64, 3/64, 5/64 AND 8/64 (LEFT TO RIGHT)

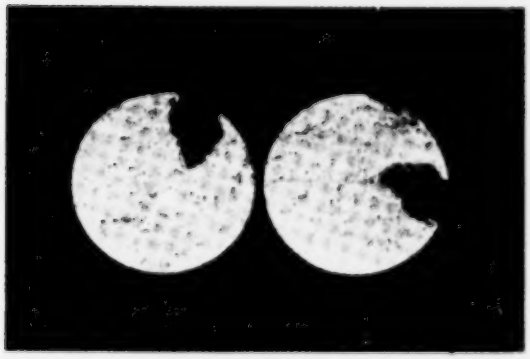

C TYPICAL UNFUSED POROSITY

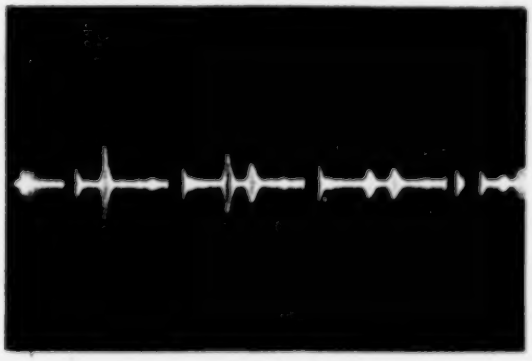

D ULTRASONIC SCOPE PATTERN OF (C)

Figure 7-26. Unfused Porosity Discontinuity

727 STRESS CORROSION

1. CATEGORY. Service

2. MATERIAL. Ferrous and Nonferrous

3. DISCONTINUITY CHARACTERISTICS

Surface. Range from shallow to very deep, and usually follow the grain flow of the material; however, transverse cracks are also possible. (See Figure 7-27.)

4. METALLURGICAL ANALYSIS

Three factors are necessary for the phenomenon of stress corrosion to occur: 1) a sustained static tensile stress, 2) the presence of a corrosive environment, and 3) the use of a material that is susceptible to this type of failure. Stress corrosion is much more likely to occur faster at high levels of stress than at low levels of stress. The type of stresses include residual (internal) as well as those from external (applied) loading.

5. NDT METHODS APPLICATION AND LIMITATIONS

a. LIQUID PENETRANT TESTING METHOD

(1) Liquid penetrant is normally used for the detection of stress corrosion.

(2) In the preparation, application, and final cleaning of articles, extreme care must be exercised to prevent over spraying and contamination of the surrounding articles.

(3) Chemical cleaning immediately before the application of liquid penetrant may seriously affect the test results if the solvents are not given time to evaporate.

(4) Service articles may contain moisture within the discontinuity which will dilute, contaminate, and invalid results if the moisture is not removed.

b. EDDY CURRENT TESTING METHOD

(1) Not normally used to detect stress corrosion.

(2) Eddy current equipment is capable of resolving stress corrosion where article configuration is compatible with equipment limitations.

c. ULTRASONIC TESTING METHOD

(1) Not normally used to detect stress corrosion.

(2) Discontinuities are perpendicular to surface of material and require surface technique.

d. MAGNETIC PARTICLE TESTING METHOD

(1) Not normally used to detect stress corrosion.

(2) Configuration of article and usual nonmagnetic condition exclude magnetic particle testing.

e. RADIOGRAPHIC TESTING METHOD

(1) Not normally used to detect stress corrosion.

(2) Surface indications are best detected by NDT method designed for such application. However, radiography can and has shown stress corrosion with the use of the proper technique.

FRACTURED ALUMINUM ALLOY COUPLING DUE TO STRESS CORROSION

Figure 7-27. Stress Corrosion Discontinuity

728 HYDRAULIC TUBING

1. CATEGORY. Processing and Service

2. MATERIAL. Aluminum 6061-T6

3. DISCONTINUITY CHARACTERISTICS

Surface and internal. Range in size from short to long, shallow to very tight and deep. Usually they will be found in the direction of the grain flow with the exception of stress corrosion, which has no direction. (See Figure 7-28.)

4. METALLURGICAL ANALYSIS

Hydraulic tubing discontinuities are usually one of the following:

a. Foreign material coming in contact with the tube material and being embedded into the surface of the tube.

b. Laps which are the result of material being folded over and not fused.

c. Seams which originate from blowholes, cracks, splits and tears introduced in the eariler processing, and then are elongated during rolling.

d. Intergranular corrosion which is due to the presence of a corrosive environment.

5. NDT METHODS APPLICATION AND LIMITATIONS

a. EDDY CURRENT TESTING METHOD

(1) Universally used for testing of nonferrous tubing.

(2) Heavier walled tubing (0.250 and above) may not be successfully tested due to the penetration ability of the equipment.

(3) The specific nature of various discontinuities may not be clearly defined.

(4) Test results may not be valid unless controlled by known standards.

(5) Testing of ferro-magnetic material may be difficult.

(6) All material should be free of any foreign material that would invalid the test results.

b. LIQUID PENETRANT TESTING METHOD

(1) Not normally used for detecting tubing discontinuities.

(2) Eddy current is more economical, faster, and with established standards is more reliable.

c. ULTRASONIC TESTING METHOD

(1) Not normally used for detecting tubing discontinuities.

(2) Eddy current is recommended over ultrasonic testing since it is faster and more economical for this range of surface discontinuity and nonferrous material.

d. RADIOGRAPHIC TESTING METHOD

(1) Not normally used for detecting tubing discontinuities.

(2) The size and type of discontinuity and the configuration of the article limit the use of radiography for screening of material for this group of discontinuities.

e. MAGNETIC PARTICLES TESTING METHOD. Not applicable. Material is nonferrous.

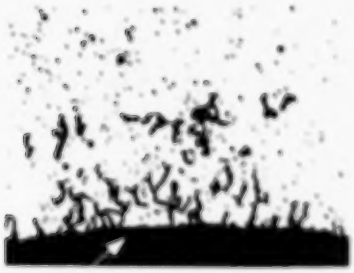

A INTERGRANULAR CORROSION

B LAP IN OUTER SURFACE OF TUBING

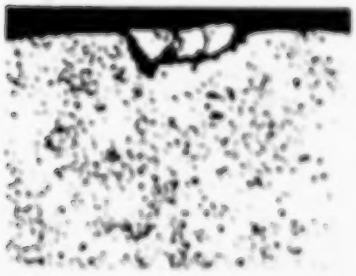

C EMBEDDED FOREIGN MATERIAL

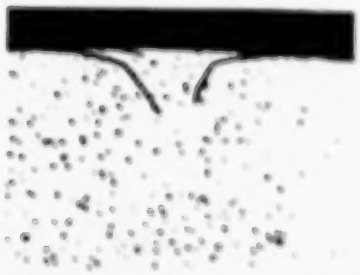

D TWIN LAPS IN OUTER SURFACE OF TUBING

Figure 7-28. Hydraulic Tubing Discontinuity

729 MANDREL DRAG

1. CATEGORY. Processing

2. MATERIAL. Nonferrous Thick-Wall Seamless Tubing

3. DISCONTINUITY CHARACTERISTICS

Internal surface of thick-wall tubing. Range from shallow even gouges to ragged tears. Often a slug of the material will be embedded within the gouged area. (See Figure 7-29.)

4. METALLURGICAL ANALYSIS

During the manufacture of thick-wall seamless tubing, the billet is ruptured as it passes through the offset rolls. As the piercing mandrel follows this fracture, a portion of the material may break loose and be forced over the mandrel. As it does the surface of the tubing may be scored or have the slug embedded into the wall. Certain types of material are more prone to this type of failure than others.

5. NDT METHODS APPLICATION AND LIMITATIONS

a. EDDY CURRENT TESTING METHOD

(1) Normally used for the testing of thin-wall pipe or tube.

(2) Eddy current testing may be confined to nonferrous materials.

(3) Discontinuities are qualitative, not quantative indications.

(4) Several factors simultaneously affect output indications.

b. ULTRASONIC TESTING METHOD

(1) Normally used for the screening of thick-wall pipe or tube for mandrel drag.

(2) Can be used to test both ferrous and nonferrous pipe or tube.

(3) Requires access from one side only.

(4) May be used in support of production line since it is adaptable for automatic instrumentation.

(5) Configuration of mandrel drag or tear will produce very sharp and noticeable indications on the scope.

c. RADIOGRAPHIC TESTING METHOD

(1) Not normally used although it has been instrumental in the detection of mandrel drag during examination of adjacent welds.

(2) Complete coverage requires several exposures around the circumference of the tube.

(3) This method is not designed for production support since it is very slow and costly for large volumes of pipe or tube.

(4) Radiograph will disclose only two dimensions and not the third.

d. LIQUID PENETRANT TESTING METHOD. Not recommended for detecting mandrel drag since discontinuity is internal and would not be detectable.

e. MAGNETIC PARTICLE TESTING METHOD. Not recommended for detecting mandrel drag. Discontinuities are not close enough to the surface to be detectable by magnetic particles. Most mandrel drag will occur in seamless stainless steel.

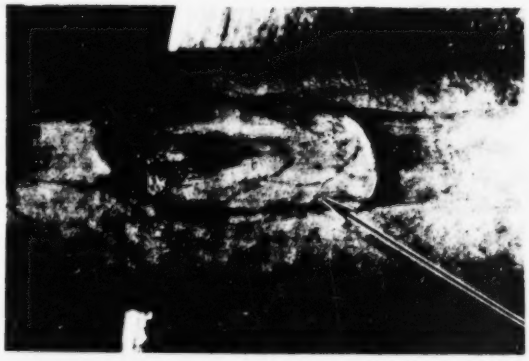

A EMBEDDED SLUG SHOWING DEEP GOUGE MARKS

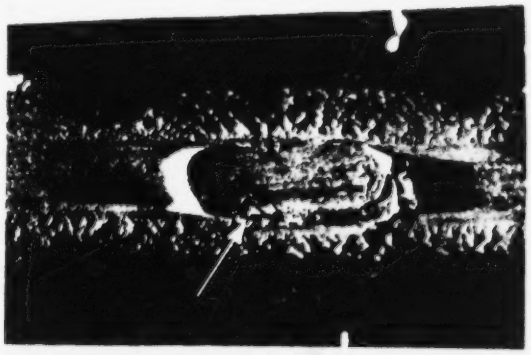

B SLUG BROKEN LOOSE FROM TUBING WALL

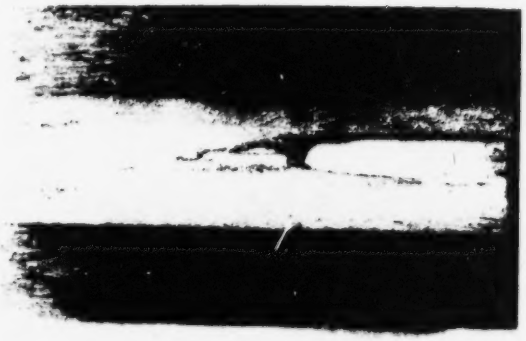

C ANOTHER TYPE OF EMBEDDED SLUG

D GOUGE ON INNER SURFACE OF PIPE

Figure 7-29. Mandrel Drag Discontinuity

730 SEMICONDUCTORS

1. CATEGORY. Processing and Service

2. MATERIAL. Hardware

3. DISCONTINUITY CHARACTERISTICS

Internal. Appear in many sizes and shapes and various degrees of density. They may be misformed, aligned, damaged, or broken internal hardware. Found in transistors, diodes, resistors, and capacitors. (See Figure 7-30.)

4. METALLURGICAL ANALYSIS

Semiconductor discontinuities such as loose wire, weld splash, flakes, solder balls, loose leads, inadequate clearance between internal elements and case, and inclusions or voids in seals or around lead connections are the product of processing errors.

5. NDT METHODS APPLICATION AND LIMITATIONS

a. RADIOGRAPHIC TESTING METHOD

(1) Universally used as the NDT method for the detection of discontinuities in semiconductors.

(2) The configuration and internal structure of the various semiconductors limit the NDT method to radiography.

(3) Semiconductors that have copper heat sinks may require more than one technique due to the density of the copper.

(4) Internal wires in semiconductors are very fine and may be constructed from materials of different density such as copper, silver, gold and aluminum. If the latter is used with the others, special techniques may be needed to resolve its reliability.

(5) Micro-particles may require the highest sensitivity to resolve.

(6) The complexity of the internal structure of semiconductors may require additional views to exclude the possibility of non-detection of discontinuities due to masking by hardware.

(7) Positive positioning of each semiconductor will prevent invalid interpretation.

(8) Source angle should give minimum distortion.

(9) Preliminary examination of semiconductors may be accomplished using a vidcon system that would allow visual observation during 360 degree rotation of the article.

b. EDDY CURRENT TESTING METHOD. Not recommended for detecting semiconductor discontinuities. Nature of discontinuity and method of construction of the article do not lend themselves to this form of NDT.

c. MAGNETIC PARTICLE TESTING METHOD. Not recommended for detecting semiconductor discontinuities.

d. LIQUID PENETRANT TESTING METHOD. Not recommended for detecting semiconductor discontinuities.

e. ULTRASONIC TESTING METHOD. Not recommended for detecting semiconductor discontinuities.

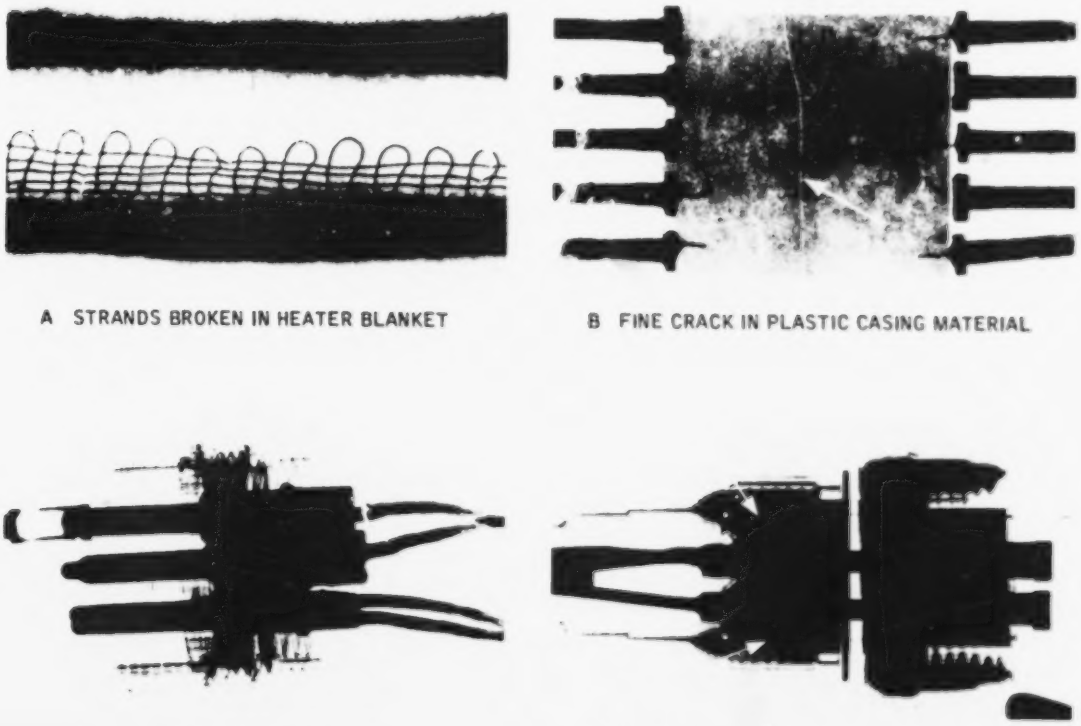

Figure 7-30. Semiconductor Discontinuity

731 HOT TEARS

1. CATEGORY. Inherent

2. MATERIAL. Ferrous Castings

3. DISCONTINUITY CHARACTERISTICS

Internal or near surface. Appear as ragged line of variable width and numerous branches. Occur singly or in groups. (See Figure 7-31.)

4. METALLURGICAL ANALYSIS

Hot cracks (tears) are caused by non-uniform cooling resulting in stresses which rupture the surface of the metal while its temperature is still in the brittle range. Tears may originate where stresses are set up by the more rapid cooling of thin sections that adjoin heavier masses of metal, which are slower to cool.

5. NDT METHODS APPLICATION AND LIMITATIONS

a. RADIOGRAPHIC TESTING METHOD

(1) Radiographic testing is the first choice since the material is cast structure and the discontinuities may be internal and surface.

(2) Orientation of the hot tear in relation to the source may influence the test results.

(3) The sensitivity level may not be sufficient to detect fine surface hot tears.

b. MAGNETIC PARTICLE TESTING METHOD

(1) Hot tears that are exposed to the surface can be screened with magnetic particle method.

(2) Article configuration and metallurgical composition may make demagnization difficult.

(3) Although magnetic particle can detect near surface hot tears, radiography should be used for final analysis.

(4) Foreign material not removed prior to testing will cause an invalid test.

c. LIQUID PENETRANT TESTING METHOD

(1) Liquid penetrant is recommended for nonferrous cast material.

(2) Liquid penetrant is confined to surface evaluation.

(3) The use of penetrants on castings may act as a contaminant by saturating the porous structure and affect the ability to apply surface finish.

(4) Repeatability of indications may be poor after a long period of time.

d. ULTRASONIC TESTING METHOD. Not recommended for detecting hot tears. Discontinuities of this type when associated with cast structure do not lend themselves to ultrasonic testing.

e. EDDY CURRENT TESTING METHOD. Not recommended for detecting hot tears. Metallurgical structure along with the complex configurations do not lend themselves to eddy current testing.

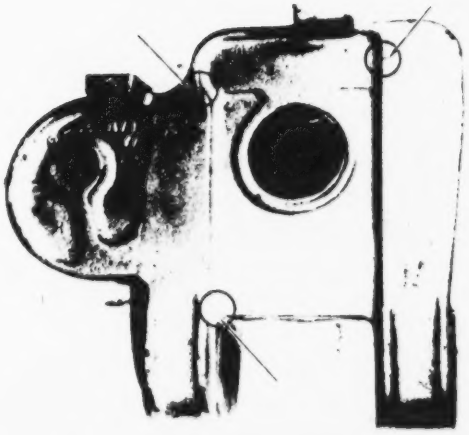

A TYPICAL HOT TEARS IN CASTING

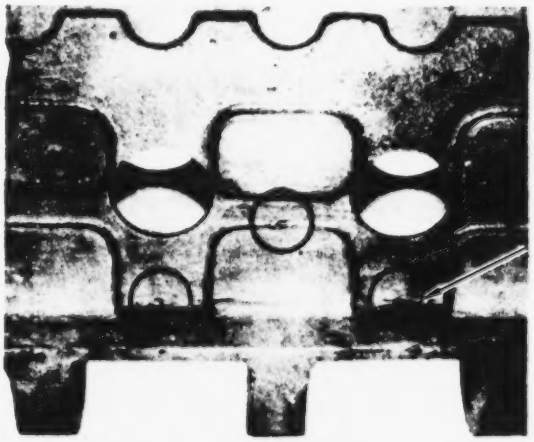

B HOT TEARS IN FILLET OF CASTING

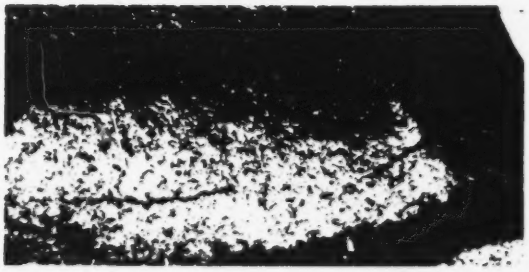

C CLOSE-UP OF HOT TEARS IN (A)

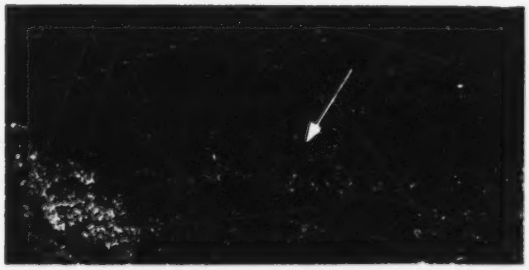

D CLOSE-UP OF HOT TEARS IN (B)

Figure 7-31. Hot Tear Discontinuity

732 INTERGRANULAR CORROSION

1. CATEGORY. Service

2. MATERIAL. Nonferrous

3. DISCONTINUITY CHARACTERISTICS

Surface or internal. A series of small micro-openings with no definite pattern. May appear singly or in groups. The insidious nature of intergranular corrosion results from the fact that very little corrosion or corrosion product is visible on the surface. Intergranular corrosion may extend in any direction following the grain boundaries of the material. (See Figure 7-32.)

4. METALLURGICAL ANALYSIS

Two factors that contribute to intergranular corrosion are:

a. Metallurgical structure of the material that is prone to intergranular corrosion such as unstabilized 300 series stainless steel.

b. Improper stress relieving or heat treat may create the susceptibility to intergranular corrosion. Either of these conditions coupled with a corrosive atmosphere will result in intergranular attack.

5. NDT METHODS APPLICATION AND LIMITATIONS

a. LIQUID PENETRANT TESTING METHOD

(1) Liquid penetrant is the first choice due to the size and location of this type of discontinuity.

(2) Chemical cleaning operations immediately before the application of liquid penetrant may contaminate the article and seriously affect the test results.

(3) Cleaning in solvents may release chlorine and accelerate intergranular corrosion.

(4) Trapped penetrant solution may present a cleaning or removal problem.

b. RADIOGRAPHIC TESTING METHOD

(1) Intergranular corrosion in the more advanced stages has been detected with radiography.

(2) Sensitivity levels may prevent the detection of fine intergranular corrosion.

(3) Radiography may not determine on which surface the intergranular corrosion will occur.

c. EDDY CURRENT TESTING METHOD

(1) Eddy current can be used for the screening of intergranular corrosion.

(2) Tube or pipe lend themselves readily to this method of NDT testing.

(3) Metallurgical structure of the material may seriously affect the output indications.

d. ULTRASONIC TESTING METHOD. Not normally used although the equipment has the capability to detect intergranular corrosion.

e. MAGNETIC PARTICLES TESTING METHOD. Not recommended for detecting intergranular corrosion. Type of discontinuity and material restrict the use of magnetic particles.

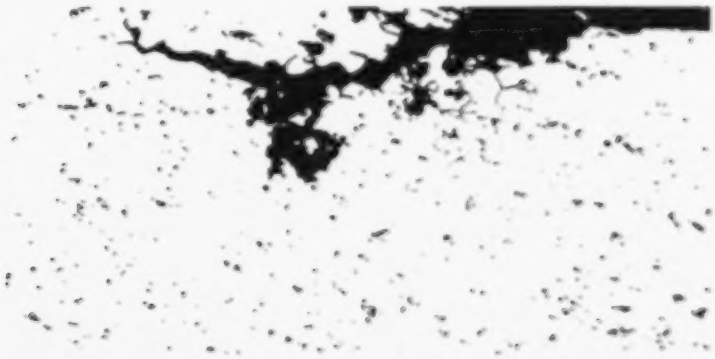

A MICROGRAPH OF INTERGRANULAR CORROSION SHOWING LIFTING OF SURFACE FROM SUBSURFACE CORROSION

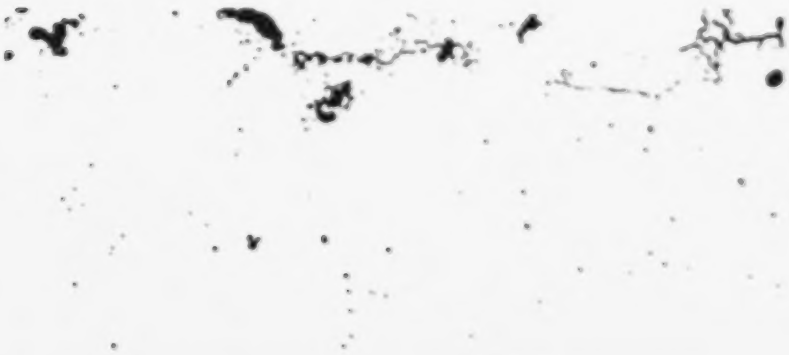

B MICROGRAPH SHOWING NATURE OF INTERGRANULAR CORROSION. ONLY MINOR EVIDENCE OF CORROSION IS EVIDENT FROM SURFACE

Figure 7-32. Intergranular Corrosion Discontinuity

☆U. S. G.P.O.:1972 – 745-384/4080, Region No. 4